PASSENGER'S SIDE COMPARTMENTS CONTAIN THE FOLLOWING:

COMPARTMENT P1 CONTAINS:
- (1) STD DEPTH ADJ SLIDE OUT TRAY
- (1) SCOTT 10HP BREATHING AIR COMPRESSOR
- BREATHING AIR PURIFIERS
- (1) HIGH PRESSURE AIR REEL W/200' OF HOSE
-

COMPARTMENT P2 CONTAINS:
- (1) STD DEPTH ADJ SHELF
-
-
-

COMPARTMENT P3 CONTAINS:
- (1) STD DEPTH ADJ SHELF
-
-
-

COMPARTMENT P4 CONTAINS:
- (1) STD DEPTH ADJ SHELF
- (2) HOOK AND LOOP RETAINING STRAPS
-
-

COMPARTMENT P5 CONTAINS:
- (1) CAB LIFT CONTROLLER
- (1) HORIZONTAL FLOOR EXTENSION
- (1) STD DEPTH ADJ SHELF

COMPARTMENT P6 CONTAINS:
- (1) RACK FOR THE FOLLOWING:
  - (1) STOKES BASKET
  - (1) BACKBOARD
  - (1) LITTLE GIANT LADDER
  - (4) PIKE POLES
-

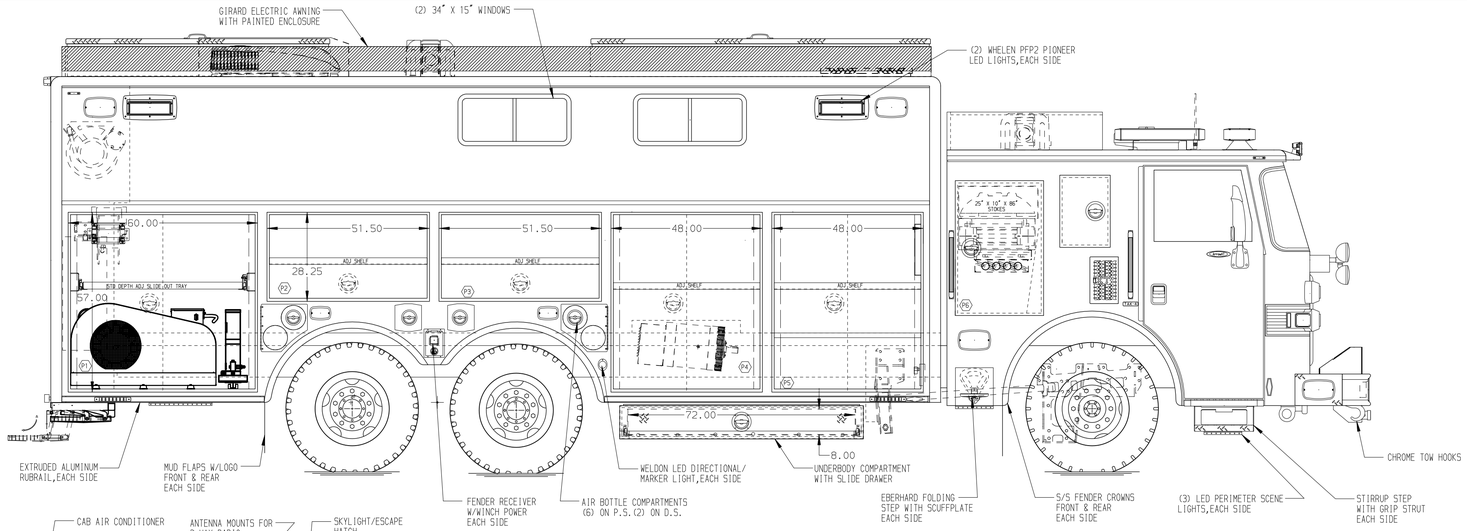

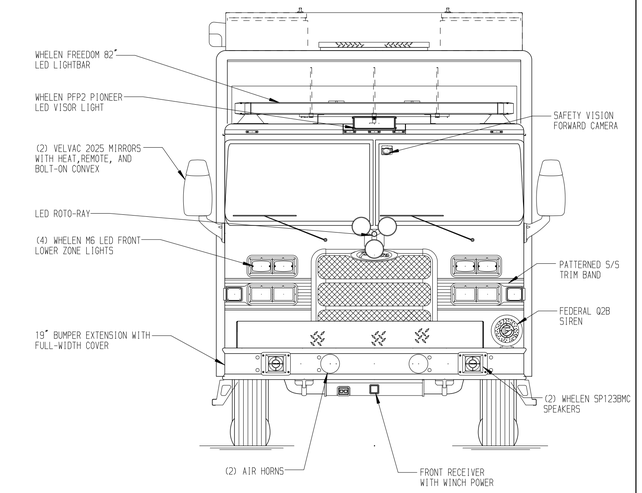

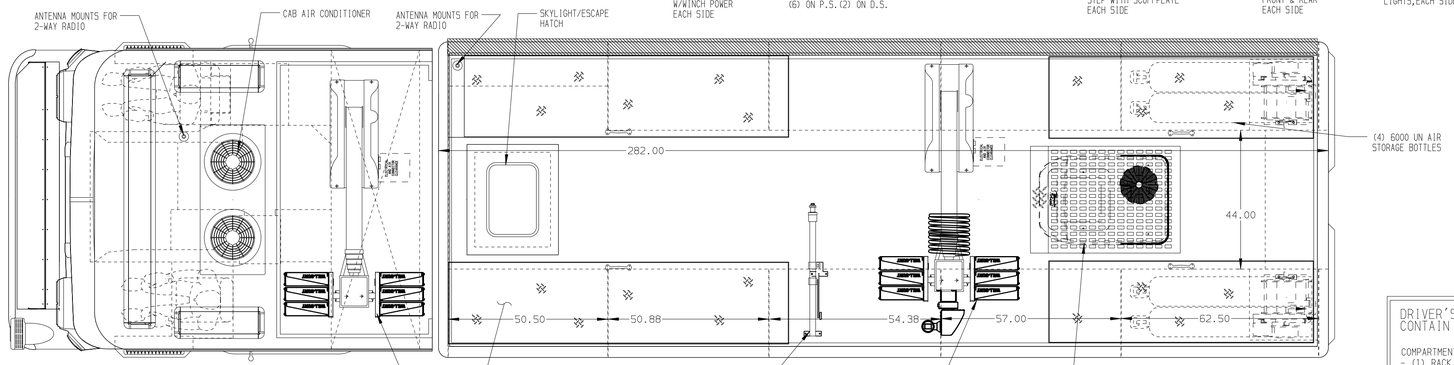

DRIVER'S SIDE COMPARTMENTS CONTAIN THE FOLLOWING:

COMPARTMENT D1 CONTAINS:
- (1) RACK FOR 6 SCBA BOTTLES
- (1) REVOLVE AIR FILL ENCLOSURE
- (1) CASCADE SYSTEM AIR CONTROL PANEL
- (1) STD DEPTH ADJ SLIDE OUT TOOLBOARD
-
-
-
-

COMPARTMENT D2 CONTAINS:
- (1) STD DEPTH ADJ SHELF
-
-
-

COMPARTMENT D3 CONTAINS:
- (1) STD DEPTH ADJ SHELF
-
-
-

COMPARTMENT D4 CONTAINS:
- (1) OIL DRY HOPPER
- (1) STD DEPTH ADJ SHELF
- (1) STD DEPTH FLOOR MOUNTED TRAY
-
-

COMPARTMENT D5 CONTAINS:
- (1) VERTICAL COMPARTMENT DIVIDER
- (2) STD DEPTH ADJ SHELVES
- (1) STD DEPTH FLOOR MOUNTED TRAY
- (1) CIRCUIT BREAKER PANEL
- (1) GENERATOR METER PANEL
- (1) SUB FEED BOX
- (2) NIGHT SCAN CONTROLLERS
-

COMPARTMENT D6 CONTAINS:
- (1) RACK FOR THE FOLLOWING:
  - (1) STOKES BASKET
  - (1) BACKBOARD
  - (1) LITTLE GIANT LADDER
  - (4) PIKE POLES
-

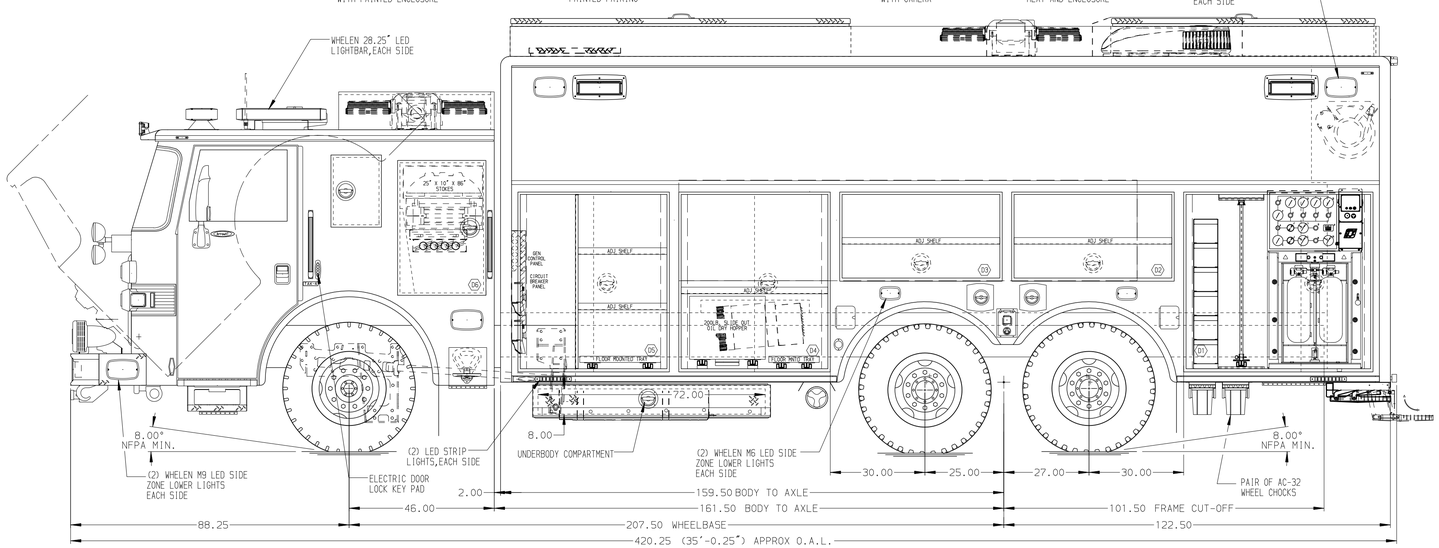

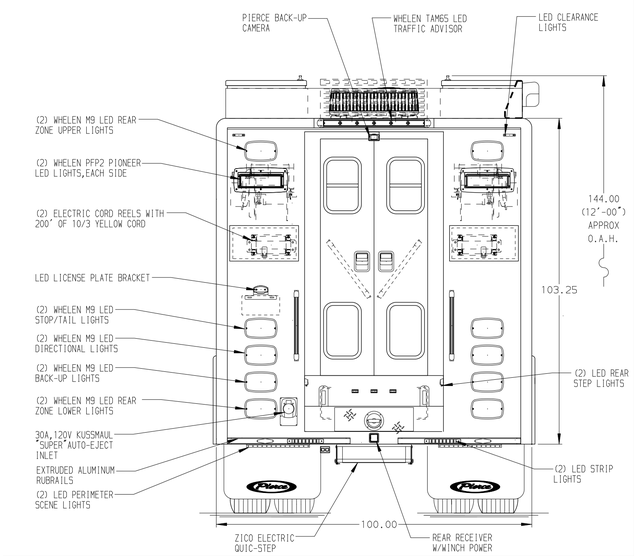

NOTE

DIMENSIONS SHOWN ARE APPROXIMATE AND ARE SUBJECT TO MINOR DEVIATIONS AS MAY OCCUR OR BE NECESSARY IN CONSTRUCTION.
MINOR DETAILS NOT SHOWN.

NOTES:
1. AIR INLET WITH DISCONNECT COUPLING LOCATED ON DRIVER'S SIDE LOWER CAB STEP WELL
2. WARN #9,000 PORTABLE RECEIVER STYLE WINCH
3. POLISHED S/S SCUFFPLATES ON CAB DOOR JAMBS
4. FLOOR IN CAB AND CREW CAB TO BE PADDED RUBBER
5. KUSSMAUL PUMP PLUS 1200 CHARGER LOCATED BEHIND PASSENGER'S SEAT WITH COVER
6. BATTERY CHARGE INDICATOR LOCATED ON DRIVER'S SEAT WITH BRACKET
7. (1) REMOVABLE WORK STATION FOR SIDE HITCH RECEIVERS
8. (4) #9,000 RECEIVER STYLE TIE DOWNS
9. AMDOR DUAL LED LIGHTS IN ALL COMPARTMENTS
10. ONAN 40kW THREE PHASE PTO DRIVEN GENERATOR WITH COVER LOCATED BETWEEN THE FRAME RAILS
11. 20A,120V DUPLEX RECEPTACLE LOCATED BEHIND DRIVER

SIDE ROLL & FRONTAL IMPACT PROTECTION

MAXIMUM O.A.L. 425.00"

MAXIMUM O.A.H. 144.00"

REV	DATE	BY	CH
D	150CT15	DHE	AZU
C	23JUL15	DHE	AZU
B	21MAY15	DHE	AZU
A	30MAR15	DHE	CDK

CHASSIS DATA
MAKE: PIERCE
MODEL: AX4600

Pierce MANUFACTURING INC.

TITLE: HEAVY DUTY RESCUE WALKIN
FOR: WEST ALBANY FIRE DEPARTMENT, WEST ALBANY, NY
DWG NO. 28560AD-SH1

JOB NO.	28560
SCALE	1:24
DATE	
DRAWN BY	DHE 16MAR15
CHECKED BY	CDK 20MAR15
SHEET SIZE	D
SHEET NO.	1 OF 2

View File Created 22-JUN-2016 11:40:55