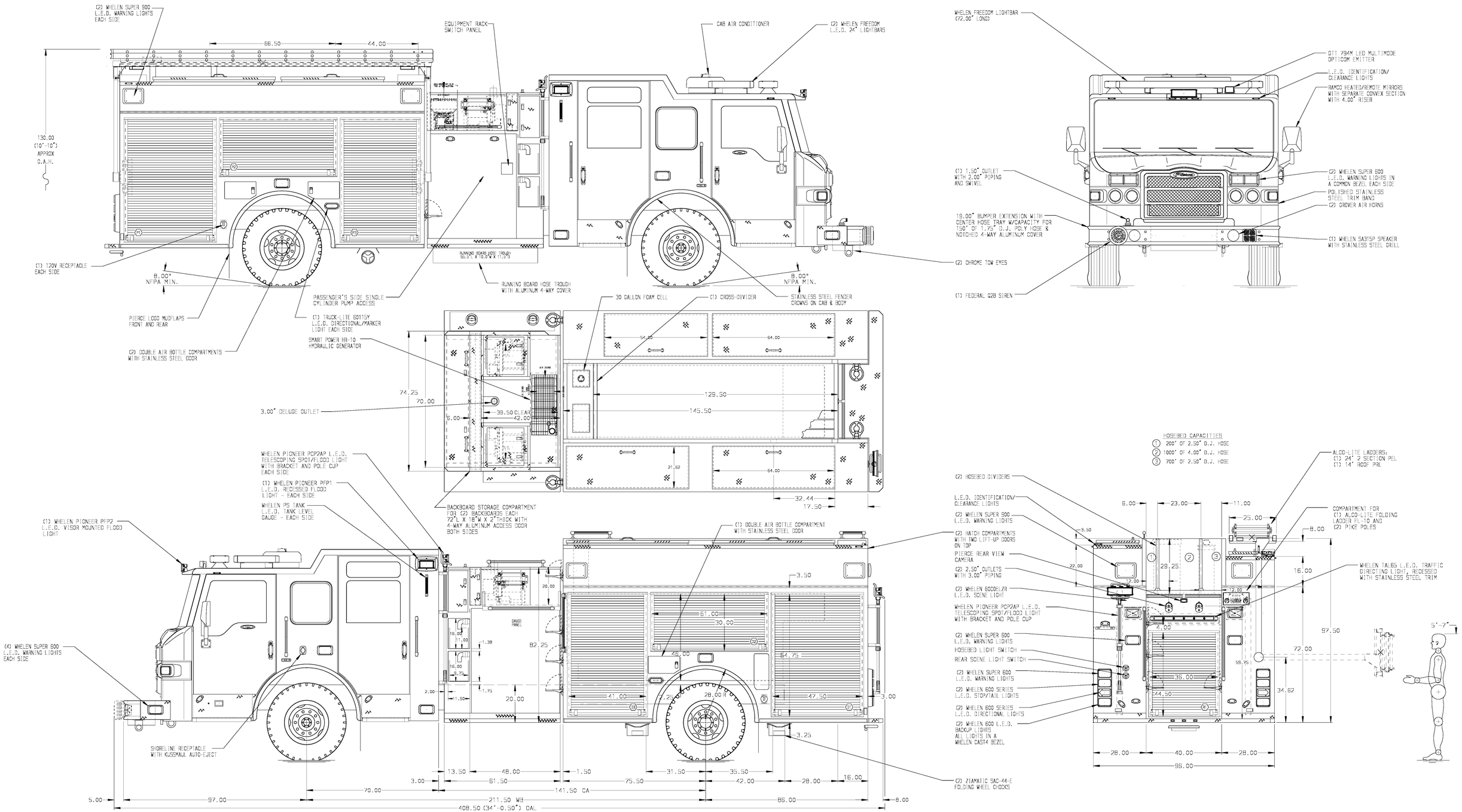


ALUMINUM BODY

NOTE

DIMENSIONS SHOWN ARE APPROXIMATE AND ARE SUBJECT TO MINOR DEVIATIONS AS MAY OCCUR OR BE NECESSARY IN CONSTRUCTION.
MINOR DETAILS NOT SHOWN.

1. ALUMINUM TREADPLATE EXTERIOR REAR WALL OF CAB
2. MOUNTING BASE FOR ANTENNA LOCATED PER SHOP ORDER
3. BATTERY CHARGER LOCATED IN CREW CAB SEAT RISER
4. PERIMETER SCENE LIGHTS LOCATED PER SHOP ORDER
5. ONE 12V L.E.D. LIGHT STRIP LOCATED ON EACH SIDE IN THE HOSEBED
6. 5/8"SL SCUFFPLATE ON REAR OUTER CORNER OF BODY
7. PULL STRAP ON DOOR IN COMPARTMENTS ALL SIDE COMPARTMENT DOORS
8. DRIP PAN GUARD FOR ROLL-UP DOOR LOCATED ALL COMPARTMENTS DOORS
9. PIERCE L.E.D. DUAL COMPARTMENT LIGHT STRIPS LOCATED PER SHOP ORDER
10. PAINTED SHELF TRACKS LOCATED IN COMPARTMENTS ALL BODY COMPARTMENTS
11. ONE FULL WIDTH/DEPTH PAINTED ADJUSTABLE SHELF IN COMPARTMENT D2, P2, P3 & R1; TWO IN D3 & P1
12. ONE FIXED SHELF LOCATED IN COMPARTMENT P3
13. ONE VERTICAL PARTITION IN COMPARTMENT D1& P3
14. ALL FOLDING STEPS TO BE TRIDENT WITH INTEGRATED L.E.D. LIGHT UNLESS SPECIFIED
16. CIRCUIT BREAKER PANEL IN COMPARTMENT D3
17. TWO HANNAY ELECTRIC REWIND CORD REELS MODEL 1620-17-18 WITH 200' OF 10/4 CABLE AND TREADPLATE ENCLOSURES LOCATED ABOVE THE PUMP HOUSE
18. BATTERY CHARGER INDICATOR LOCATED IN DRIVER SIDE STEP WELL
19. AIR INLET WITH DISCONNECT COUPLING LOCATED IN THE DRIVER SIDE STEP WELL
20. AIR OUTLET LOCATED ON THE DRIVER SIDE PUMP PANEL
21. TWO ADJUSTABLE SHELVES WITH 1.00" SIDES LOCATED IN COMPARTMENT P3
22. ONE ADJUSTABLE TILT/SLIDE-OUT TRAY LOCATED IN COMPARTMENT D2 & P2

| REV | DATE | BY | CH |
|---|---|---|---|
| 1 | 10MAR15 | BZI | JGO |
| 2 | 12FEB15 | BZI | JGO |
| 3 | 14NOV14 | BZI | CTR |

CHASSIS DATA
MAKE: PIERCE
MODEL: IMPEL
DWG NO.: 28339AD

Pierce MANUFACTURING INC.

TITLE: 1250-D-780 750 GALLON WATER TANK 30 GALLON FOAM 161" FH & D BODY BOTH SIDES, HYD GENERATOR
FOR: SEMINOLE COUNTY FIRE DEPARTMENT SANFORD, FLORIDA

| JOB NO. | SCALE | DRAWN BY | CHECKED BY | SHEET SIZE | SHEET NO. |
|---|---|---|---|---|---|
| 28339 01,02 | 1:24 | BZI | CTR | D | 1 OF 1 |

DATE: 22OCT14 / 10NOV14

View File Created 10-MAR-2015 12:07:46