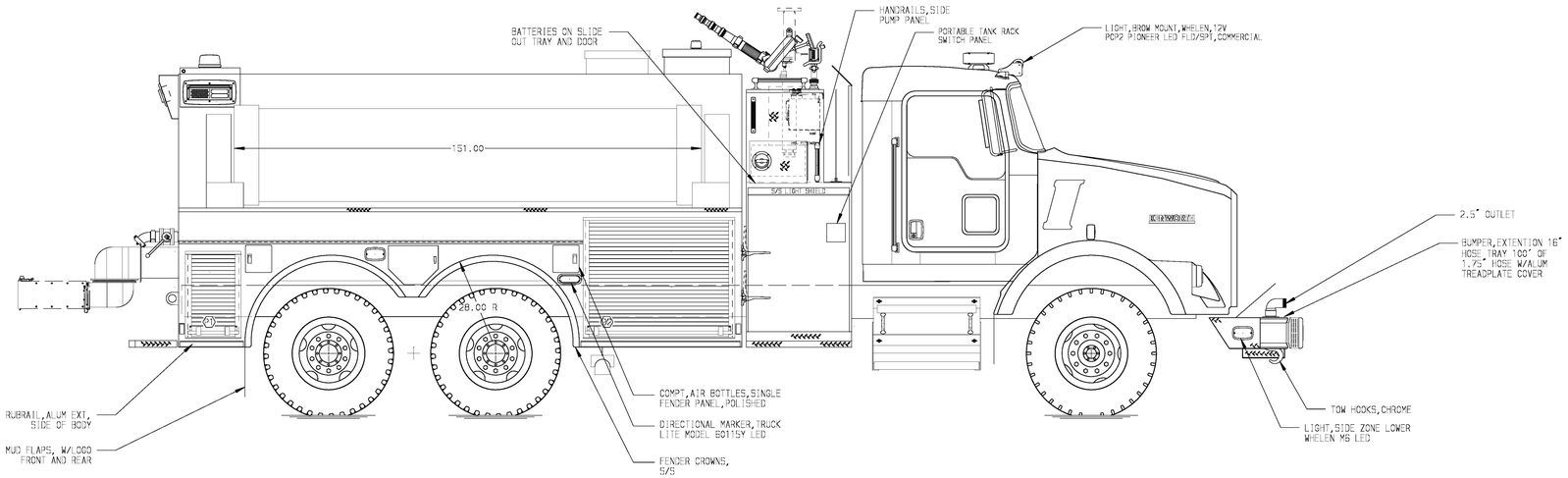

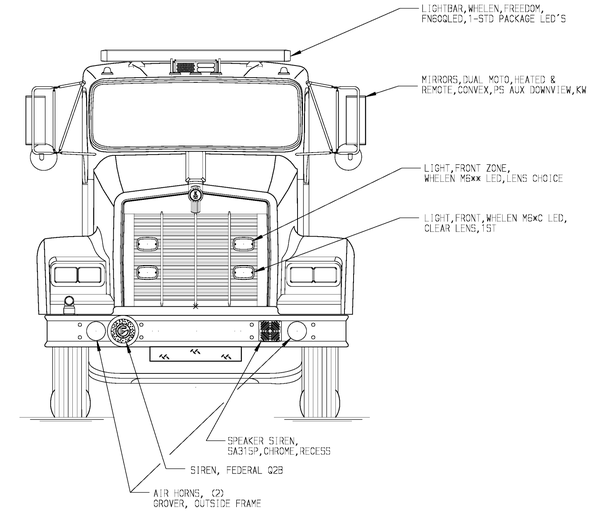

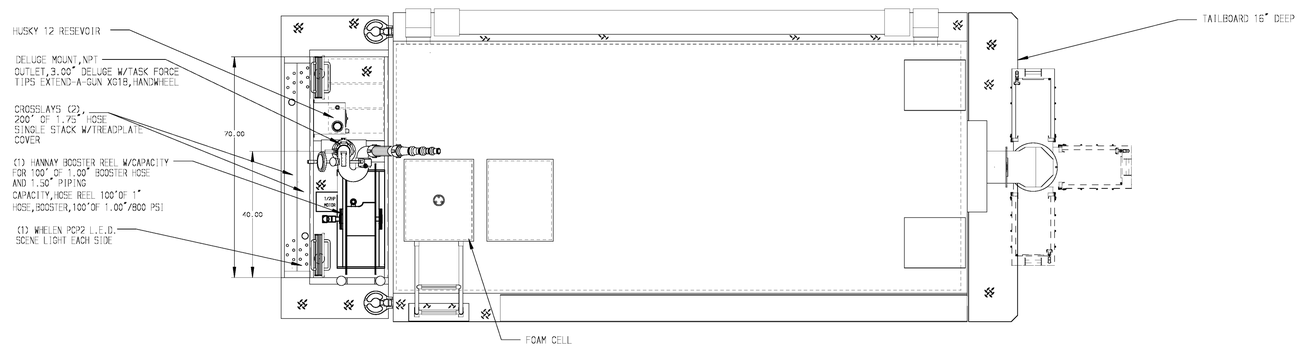

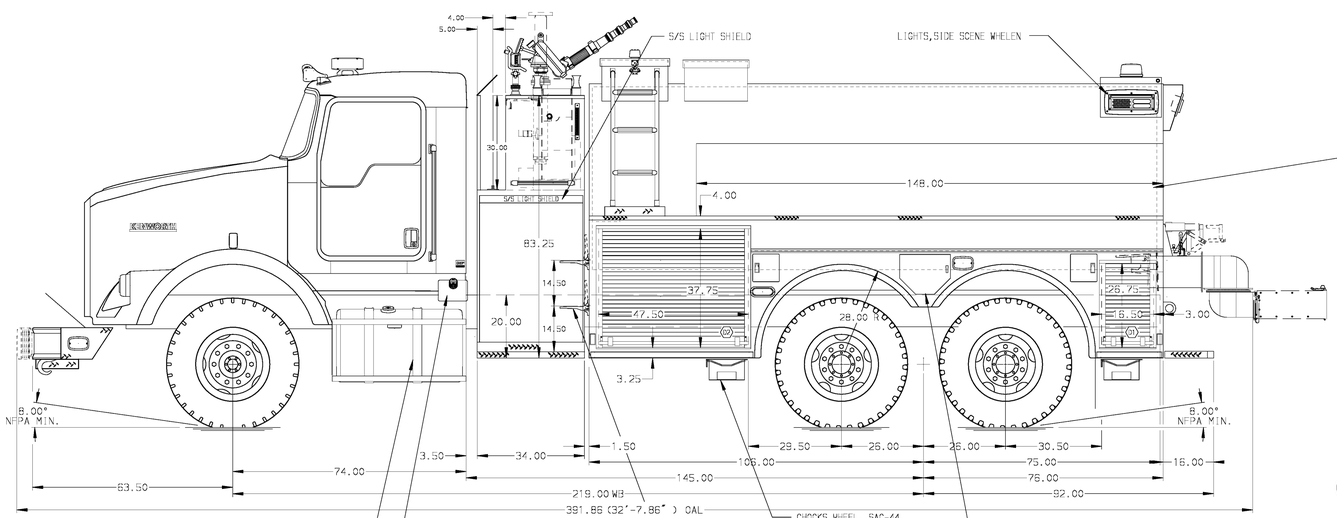

ALUMINUM BODY

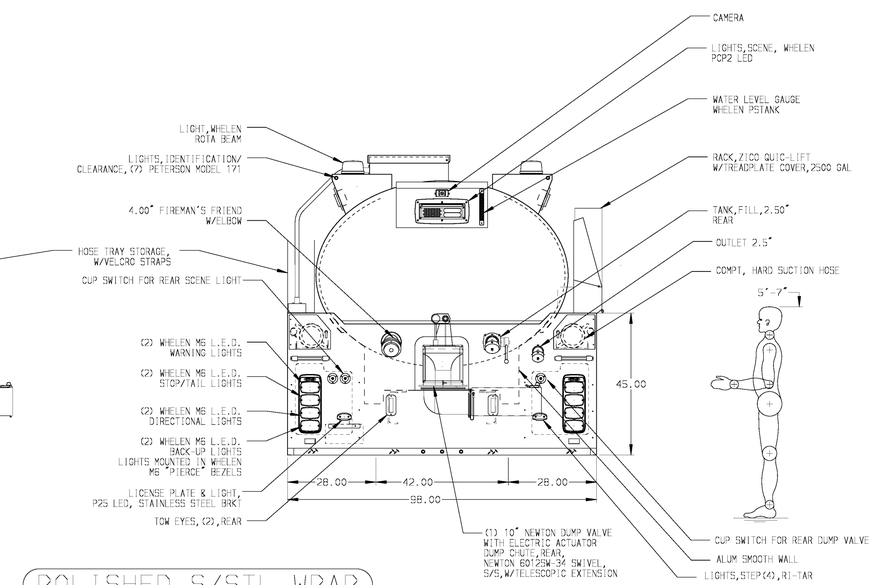

POLISHED S/STL WRAP

NOTE

DIMENSIONS SHOWN ARE APPROXIMATE AND ARE SUBJECT TO MINOR DEVIATIONS AS MAY OCCUR OR BE NECESSARY IN CONSTRUCTION.
MINOR DETAILS NOT SHOWN.

REV.	DATE	BY	CHK'D	
				CHASSIS DATA
V	11MAR15	JLA	VMO	CHASSIS
V	05FEB15	JAF	VMO	KW
V	14NOV14	EMO	JCH	MODEL
				T800

Pierce MANUFACTURING INC.
BRADENTON, FLORIDA

TITLE	1500-D-2450 POLY,40 GAL FOAM 182"ELLIPTICAL BODY 34"SIDE CONTROL (2)CROSSLAYS	JOB NO. 28423	SCALE 1:24
FOR	FERRUM VOL. FIRE DEPARTMENT FERRUM, VIRGINIA	DATE 25SEP14	DRAWN BY EMO
		10OCT14	CHK'D BY CAD
DRWG. NO.	28423AD	SHEET NO. 1 OF 1	SHEET SIZE D

View File Created 13-MAR-2015 07:10:37