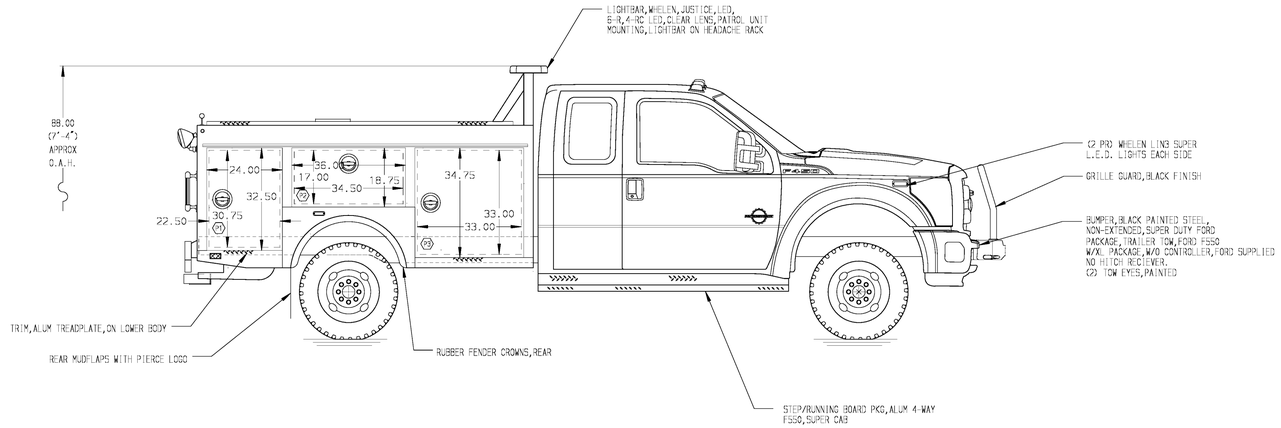

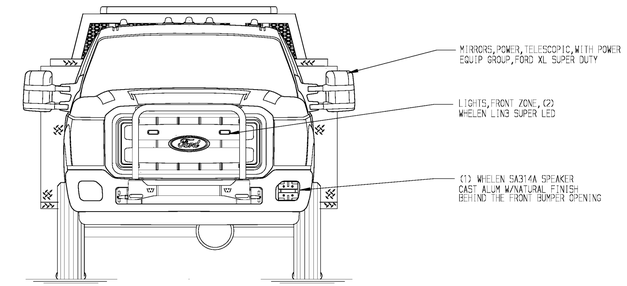

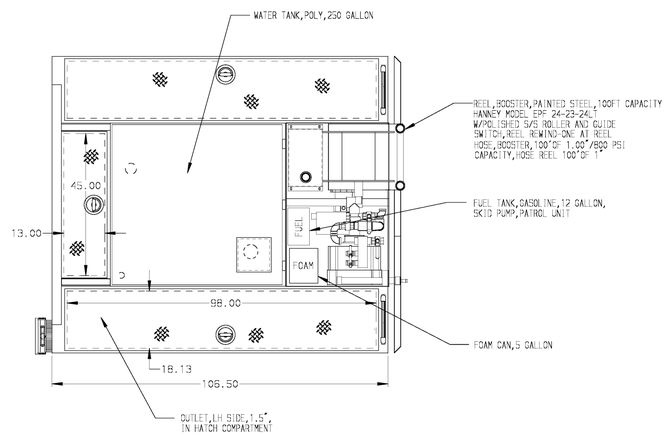

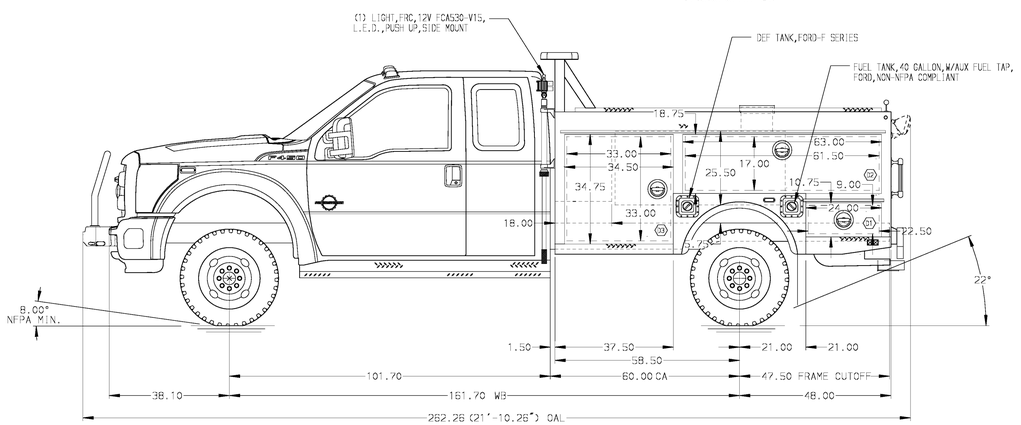

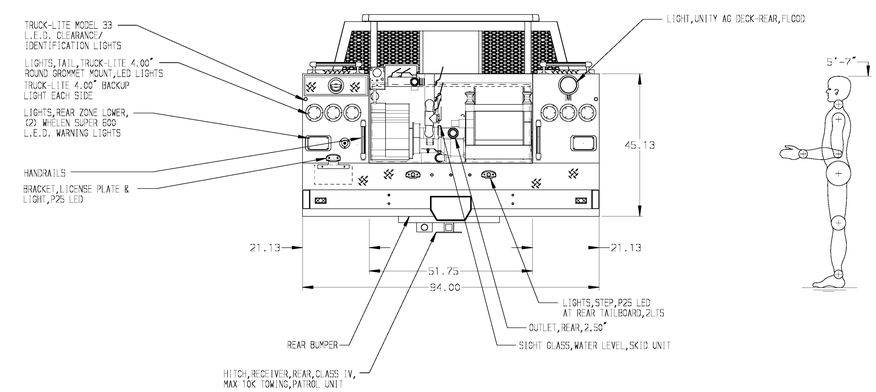

ALUMINUM BODY

NOTE
DIMENSIONS SHOWN ARE APPROXIMATE
AND ARE SUBJECT TO MINOR DEVIATIONS
AS MAY OCCUR OR BE NECESSARY IN
CONSTRUCTION.
MINOR DETAILS NOT SHOWN.

REV.	DATE	BY	CHK'D
1	04JUN15	JLA	RWI
2	20MAR15	JLA	ERX

CHASSIS DATA
CHASSIS: FORD
MODEL: F-450 4X4

Pierce MANUFACTURING INC.
BRADENTON, FLORIDA

TITLE	PATROL TRUCK,60"CA BODY,250 GALLON POLY -	JOB NO. 28663	DATE 12JAN15
		SCALE 1:24	DRAWN BY JAF
FOR	ETOWAH FIRE DEPT,AR ETOWAH,ARKANSAS		CHK'D BY JCH 15JAN15
DRWG. NO.	28663AD	SHEET NO. 1 OF 1	SHEET SIZE D

View File Created 04-JUN-2015 15:22:16