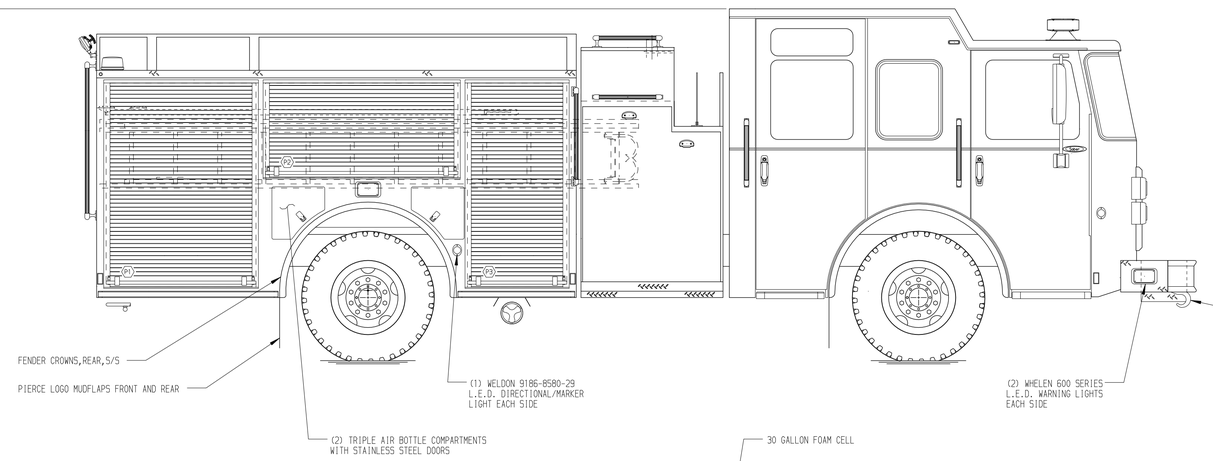

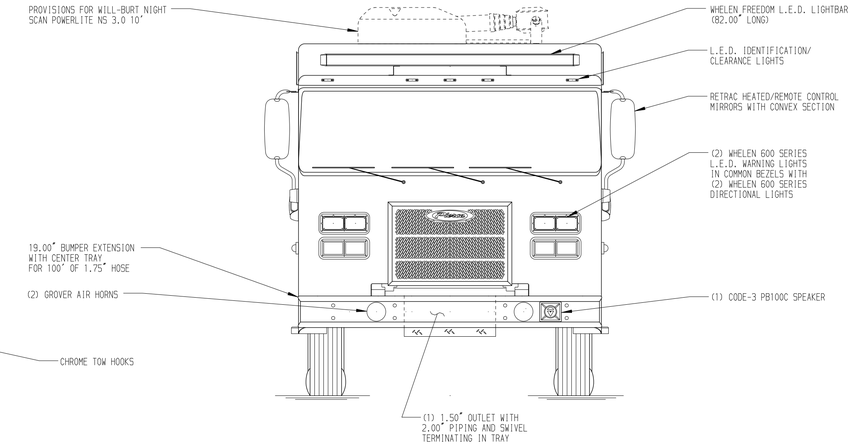

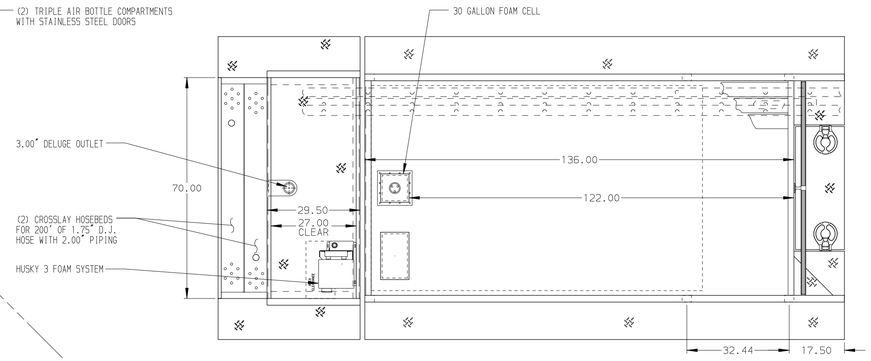

HOSEBED CAPACITIES

1. 400' OF 2.50" D.J.POLY HOSE
2. 1000' OF 5.00" D.J.POLY HOSE
3. 600' OF 2.50" D.J.POLY HOSE

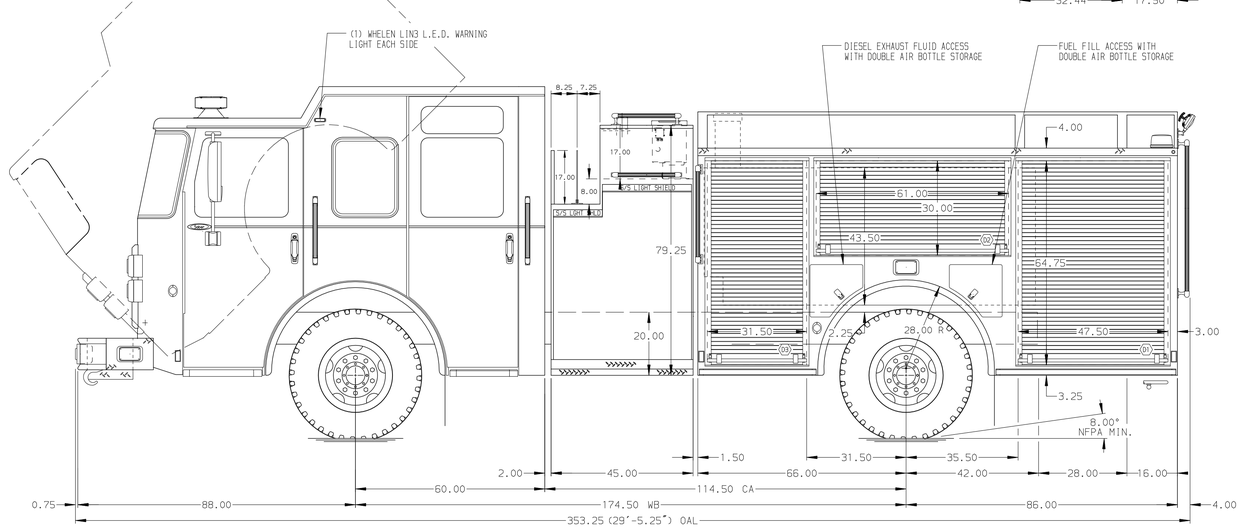

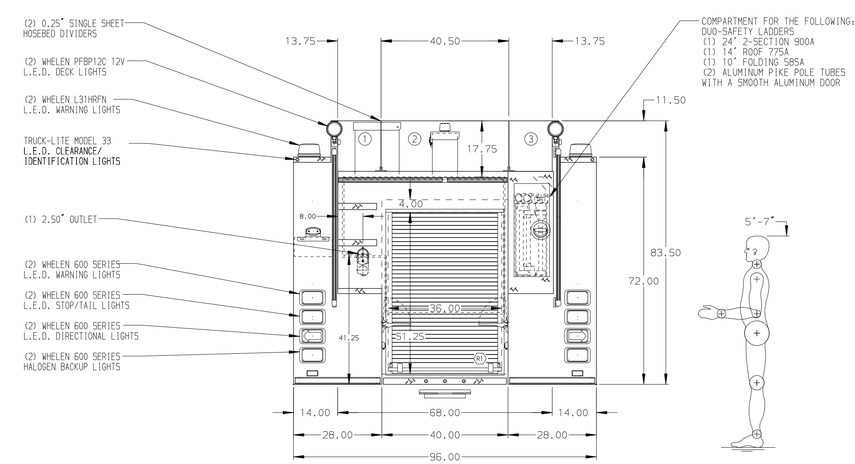

ALUMINUM BODY

NOTE

DIMENSIONS SHOWN ARE APPROXIMATE AND ARE SUBJECT TO MINOR DEVIATIONS AS MAY OCCUR OR BE NECESSARY IN CONSTRUCTION.
MINOR DETAILS NOT SHOWN.

REV	DATE	BY	CH
B	28AUG15	JLA	CAG
A	23JUL15	DDO	KBO

CHASSIS DATA
MAKE: PIERCE
MODEL: SABER FR

Pierce MANUFACTURING INC.

TITLE: 1250-D-780P, 750G WATER W/30G FOAM; 152" PUMPER BODY SIDE CONTROL; 45" PUMPHOUSE; (2) CROSSLAYS; DELUGE

FOR: PIERCE FIELD UNIT
BRADENTON, FLORIDA

DWG NO.: 28936AD

JOB NO.	28936
SCALE	1:24
DATE	
DRAWN BY	DDO
	17JUN15
CHECKED BY	KBO
	29JUN15
SHEET SIZE	D
SHEET NO.	1 OF 1

View File Created 28-AUG-2015 14:57:45