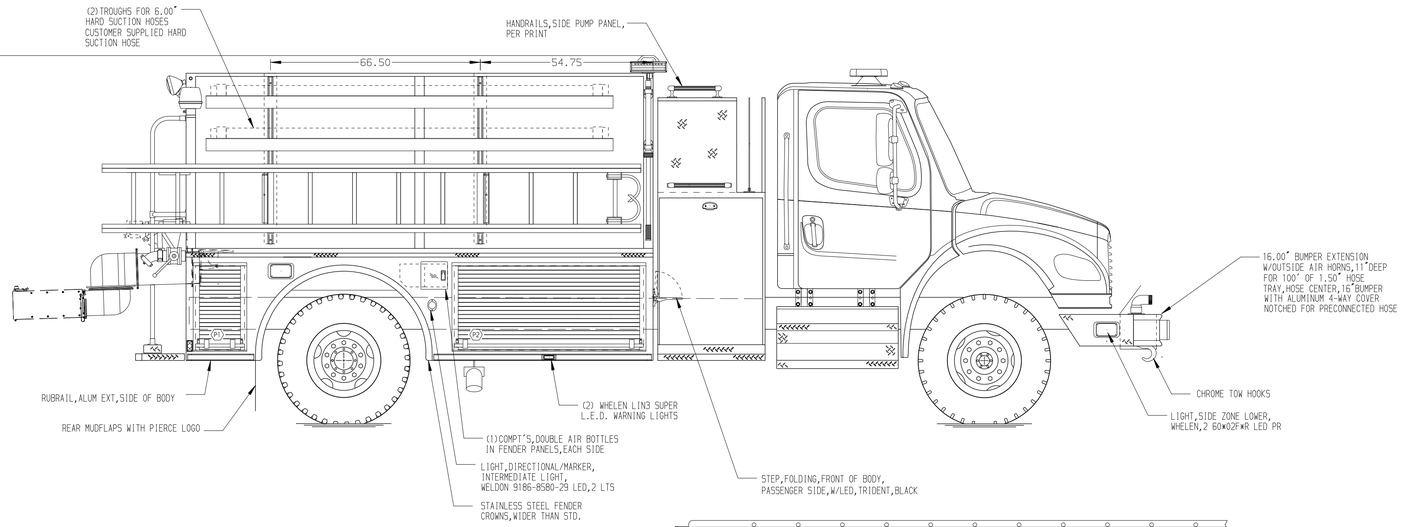

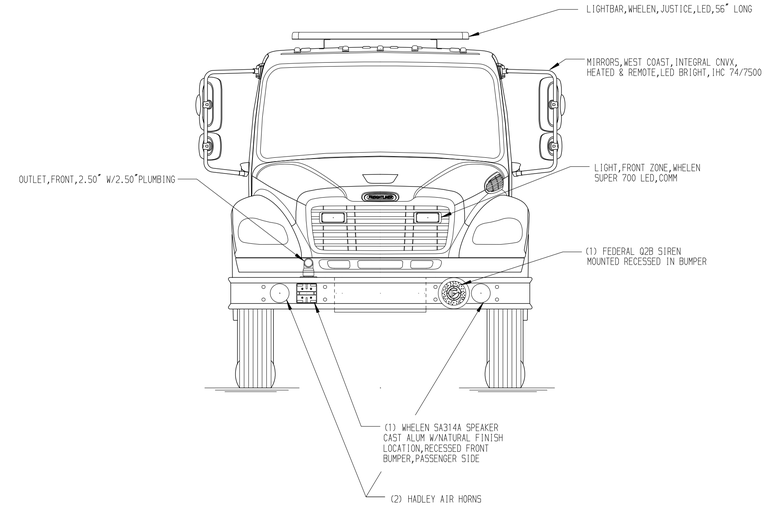

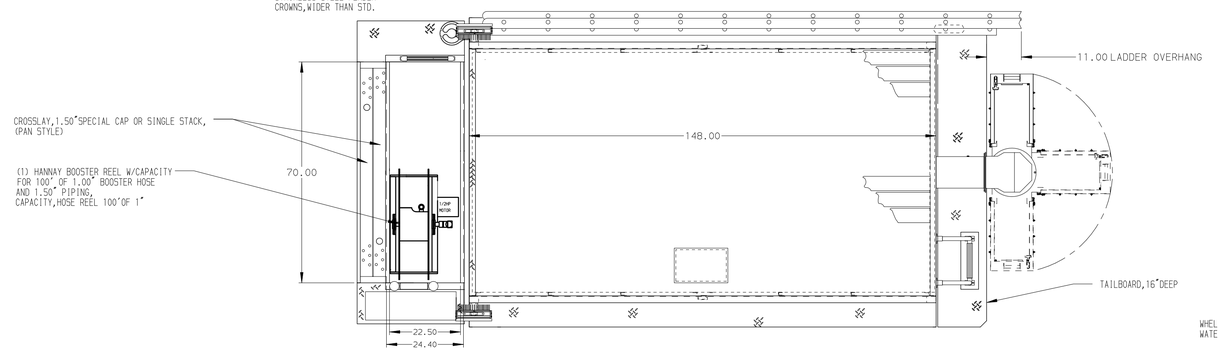

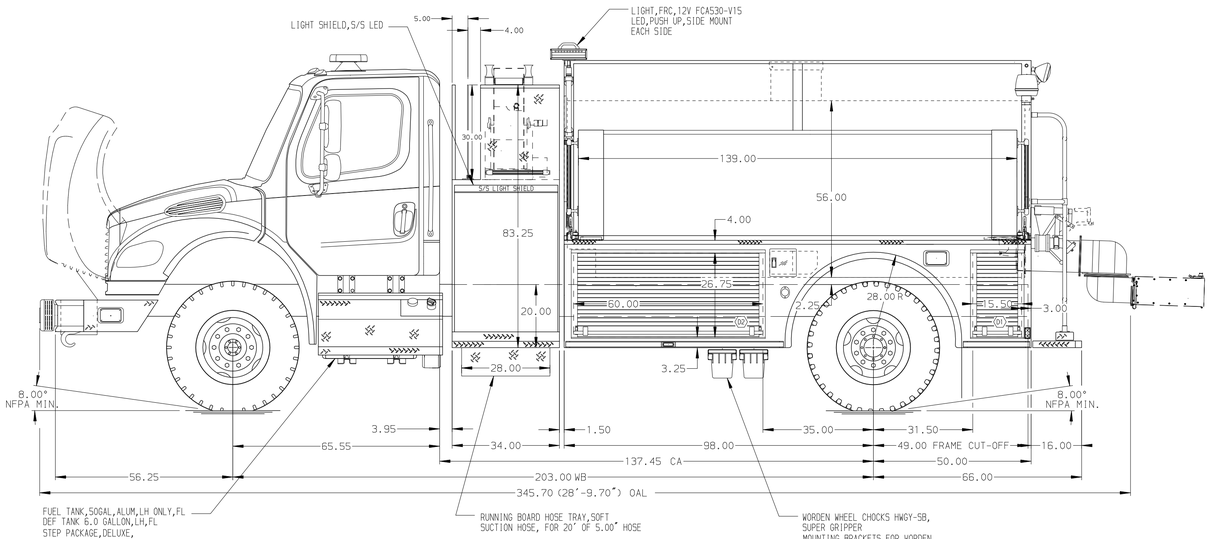

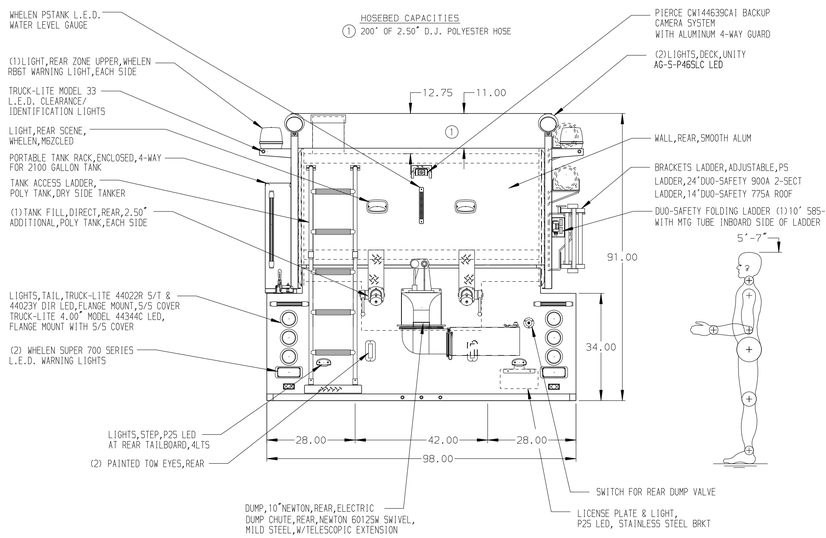

ALUMINUM BODY

MAXIMUM O.A.L. 348"

NOTE

DIMENSIONS SHOWN ARE APPROXIMATE AND ARE SUBJECT TO MINOR DEVIATIONS AS MAY OCCUR OR BE NECESSARY IN CONSTRUCTION.
MINOR DETAILS NOT SHOWN.

REV	DATE	BY	CH
7	07DEC15	JLA	GSC
6	05OCT15	JLA	GSC
5	31AUG15	RWI	RWI

CHASSIS DATA
MAKE: FL
MODEL: M2-106

Pierce MANUFACTURING INC.
BRADENTON, FLORIDA

TITLE: 1000-D-2000 POLY,148"DRYSIDE 34"SIDE CONTROL,(2)1.5"CROSSLAYS
FOR: SOUTH SURRY VOLUNTEER FIRE DEPARTMENT DOBSON,NORTH CAROLINA
DWG NO.: 28974AD

JOB NO.	28974
SCALE	1:24
DATE	
DRAWN BY	JAF
	17APR15
CHECKED BY	RWI
	20AUG15
SHEET SIZE	D
SHEET NO.	1 OF 1

View File Created 10-DEC-2015 10:10:13