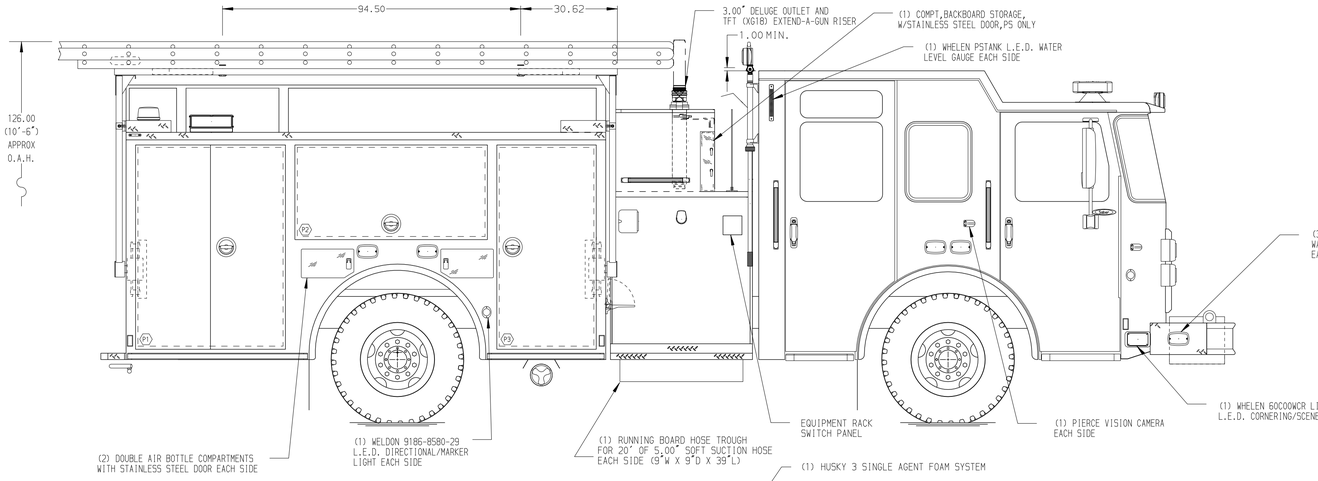

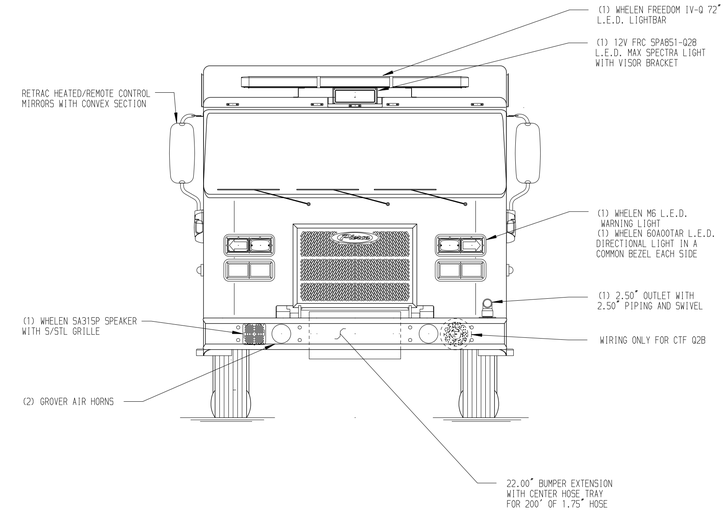

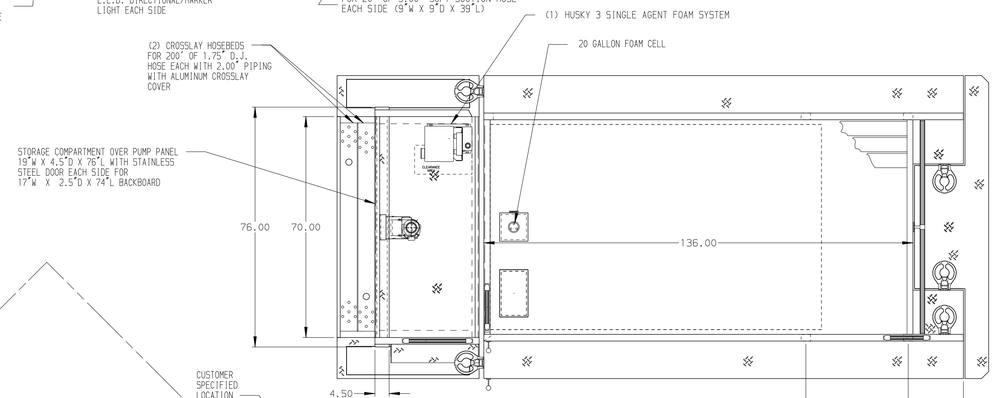

HOSEBED CAPACITIES

1. 500' OF 2.50" D.J. POLYESTER HOSE
2. 500' OF 2.50" D.J. POLYESTER HOSE
3. 500' OF 2.50" D.J. POLYESTER HOSE
4. 400' OF 1.50" D.J. POLYESTER HOSE

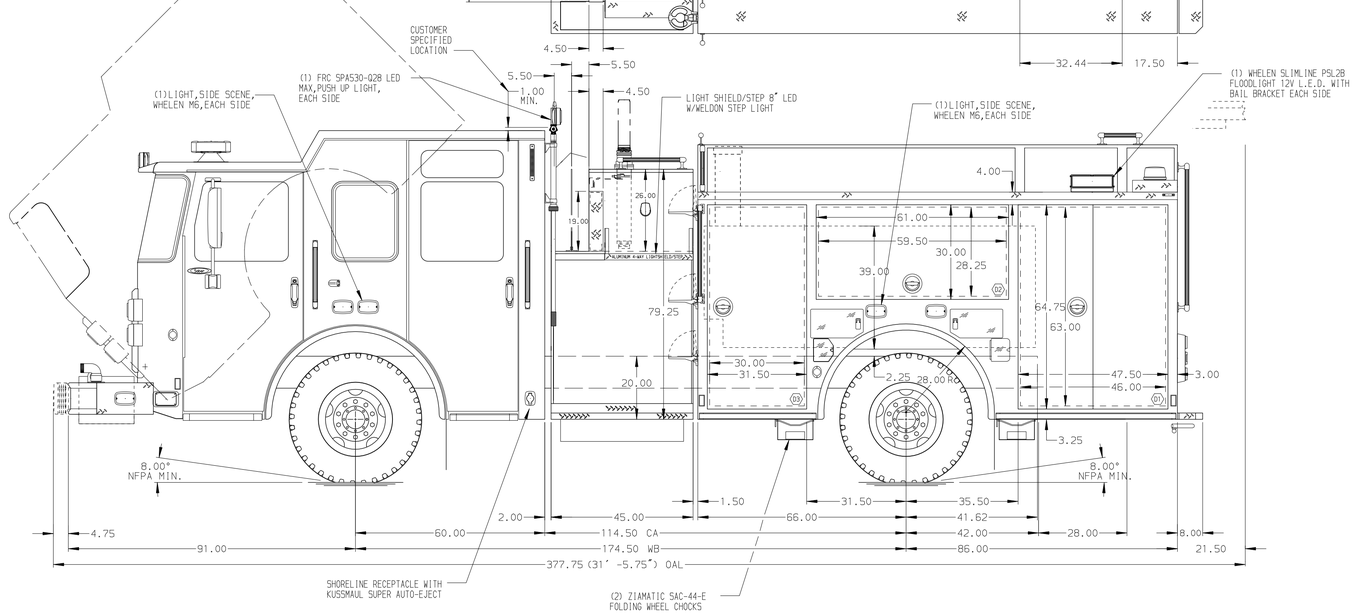

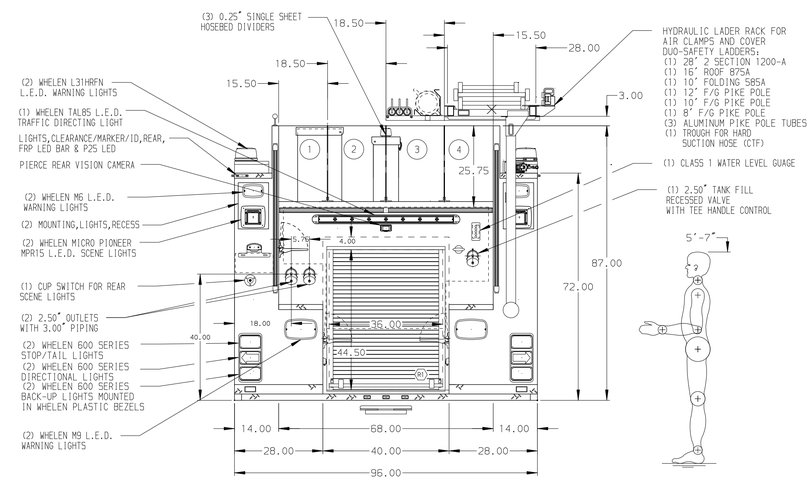

ALUMINUM BODY

NOTE

DIMENSIONS SHOWN ARE APPROXIMATE
AND ARE SUBJECT TO MINOR DEVIATIONS
AS MAY OCCUR OR BE NECESSARY IN
CONSTRUCTION.
MINOR DETAILS NOT SHOWN.

REV	DATE	BY	CH
D	08FEB16	JLA	GSC
C	05JAN16	JLA	GSC
B	17DEC15	JLA	GSC
A	04NOV15	MWA	SMA

CHASSIS DATA — MAKE: PIERCE — MODEL: SABER-FR

Pierce MANUFACTURING INC.

TITLE: 1500-D-750 POLY,152" FH, 20 GAL FOAM CELL
FDLER BODY, (2) CROSSLAYS, DELUGE, HYD EQUIP RACK

FOR: SKAGIT COUNTY FIRE DISTRICT #4
CLEAR LAKE,WASHINGTON

DWG NO. 29053AD

JOB NO.	29053
SCALE	1:24
DATE	
DRAWN BY	MWA 14OCT15
CHECKED BY	SMA 15OCT15
SHEET SIZE	D
SHEET NO.	1 OF 1

View File Created 08-FEB-2016 13:13:19