PASSENGER'S SIDE COMPARTMENTS
CONTAIN THE FOLLOWING:

COMPARTMENT P1 CONTAINS:
- (1) FIXED GUSSETED SHELF
- (2) 23"DP FLOOR MTD TRAYS W/ON-SCENE SLIDES
- (2) 23"DP ADJ SLIDE OUT TRAYS W/ON-SCENE SLIDES
- (1) 30A,240V T.L. RECEPTACLE
- (2) HYDRAULIC REELS W/100' OF HOSE
- (1) HORIZONTAL COMPARTMENT DIVIDER
- (1) VERTICAL COMPARTMENT PEGBOARD DIVIDER
- (2) 20A,120V DUPLEX RECEPTACLES

COMPARTMENT P2 CONTAINS:
- (1) HORIZONTAL COMPARTMENT DIVIDER
- (1) VERTICAL COMPARTMENT DIVIDER
- (2) ALUMINUM TOOL BOXES
- (2) 22"DP ADJ SHELVES W/1"DOWN FRONT FLANGE

COMPARTMENT P3 CONTAINS:
- (1) 23"DP FLOOR MTD TRAY W/ON-SCENE SLIDES
- (1) SPECIAL POLY TRAY IN SLIDE OUT TRAY
- (1) 22"DP ADJ SHELF
-

COMPARTMENT P4 CONTAINS:
- (1) VERTICAL COMPARTMENT DIVIDER
- (2) 6000 LN AIR STORAGE BOTTLES
- (1) LOW PRESSURE AIR REEL W/150' OF HOSE
- (1) 23"DP ADJ SLIDE OUT TRAY W/ON-SCENE SLIDES
- (4) ALUMINUM TOOL BOXES
- (1) 20A,120V 6-PLACE RECEPTACLE
- (1) 50A,250V RECEPTACLE
- (1) 22"DP ADJ SHELF

COMPARTMENT P5 CONTAINS:
- ALUMINUM PEGBOARD ON REAR/SIDE WALLS OF COMPARTMENT
- (3) STD DEPTH ADJ SLIDE OUT TOOLBOARDS
- (1) STD DEPTH ADJ SLIDE OUT/PIVOT TOOLBOARD
-
-

COMPARTMENT P6 CONTAINS:
- (3) 2-WAY ADJ SHELVES
- (1) ELECTRIC CORD REEL WITH 200' OF 10/3 YELLOW CORD
- (1) BACKBOARD RACK

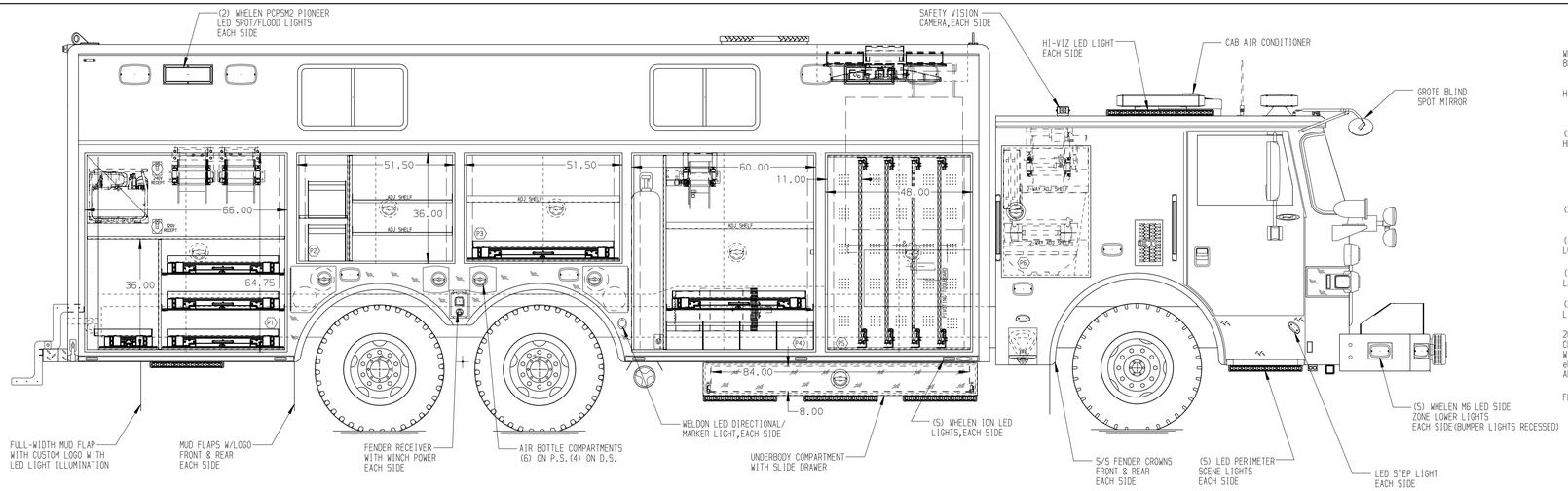

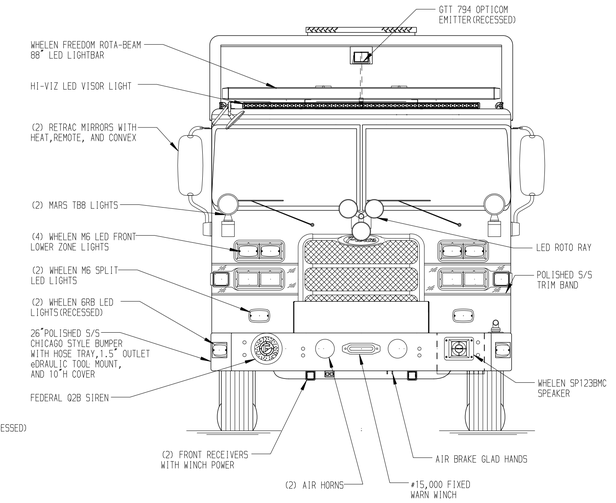

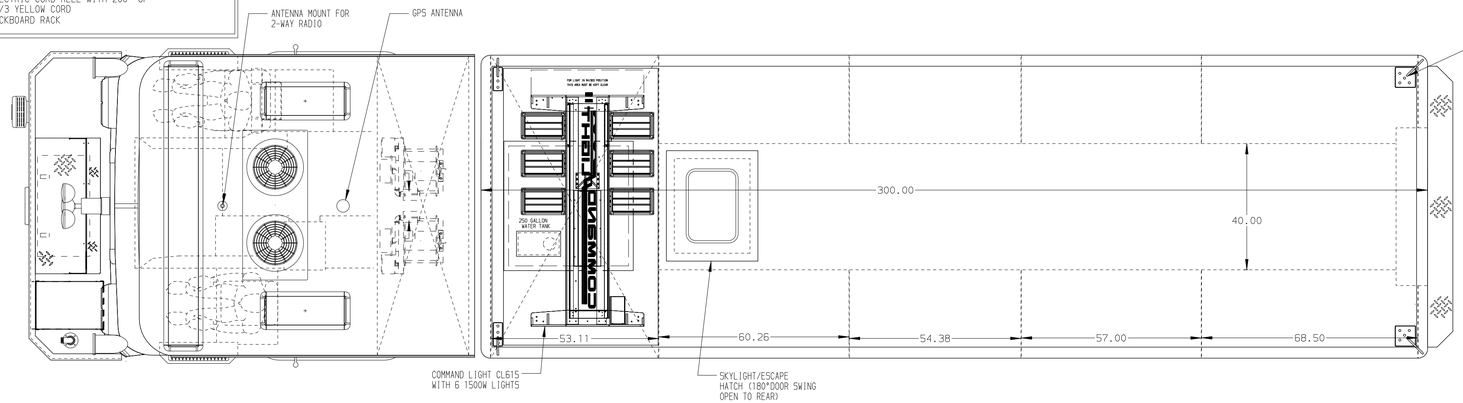

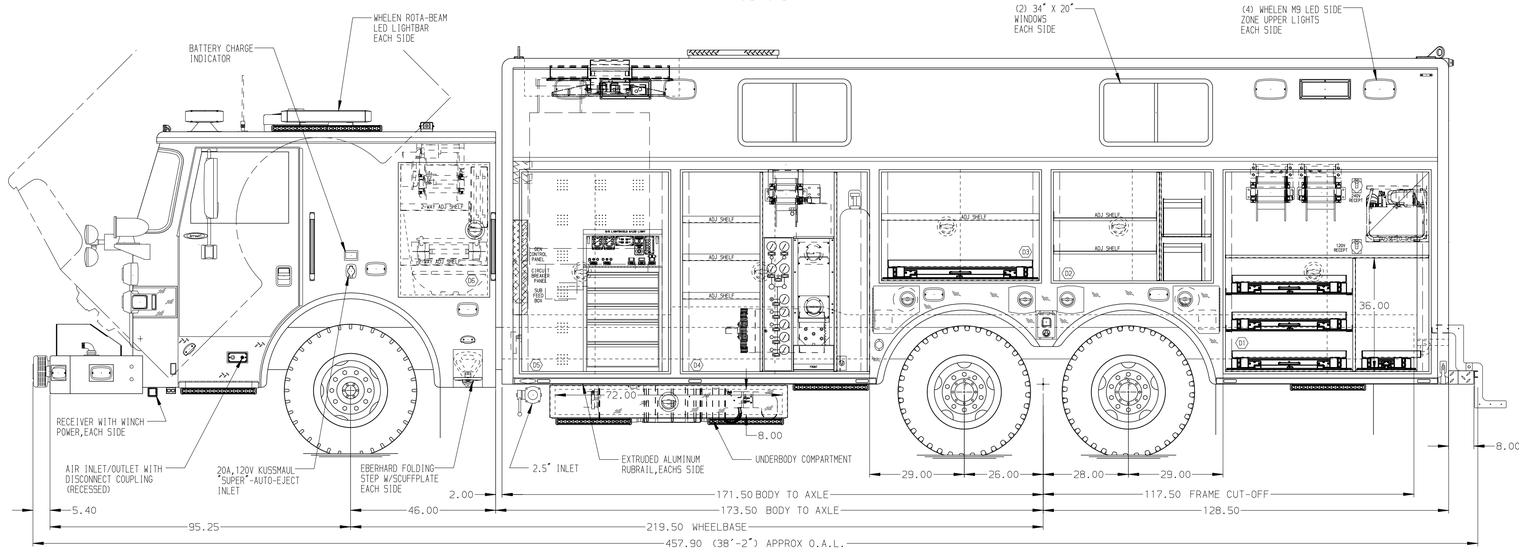

DRIVER'S SIDE COMPARTMENTS
CONTAIN THE FOLLOWING:

COMPARTMENT D1 CONTAINS:
- (1) FIXED GUSSETED SHELF
- (2) 23"DP FLOOR MTD TRAYS W/ON-SCENE SLIDES
- (2) 23"DP ADJ SLIDE OUT TRAYS W/ON-SCENE SLIDES
- (1) 30A,240V T.L. RECEPTACLE
- (2) HYDRAULIC REELS W/100' OF HOSE
- (1) HORIZONTAL COMPARTMENT DIVIDER
- (1) VERTICAL COMPARTMENT PEGBOARD DIVIDER
- (2) 20A,120V DUPLEX RECEPTACLES

COMPARTMENT D2 CONTAINS:
- (1) HORIZONTAL COMPARTMENT DIVIDER
- (1) VERTICAL COMPARTMENT DIVIDER
- (2) 22"DP ADJ SHELVES W/1"DOWN FRONT FLANGE
- (2) ALUMINUM TOOL BOXES

COMPARTMENT D3 CONTAINS:
- (1) 23"DP FLOOR MTD TRAY W/ON-SCENE SLIDES
- (1) 22"DP ADJ SHELF
-
-

COMPARTMENT D4 CONTAINS:
- (1) VERTICAL COMPARTMENT DIVIDER
- (3) STD DEPTH ADJ SHELVES
- (2) 6000 LN AIR STORAGE BOTTLES
- (1) "SPACESAVER"2-BOTTLE FILL ENCLOSURE
- (1) CASCADE SYSTEM CONTROL PANEL
- (1) LOW PRESSURE AIR REEL W/150' OF HOSE
- (1) 50A,250V RECEPTACLE
- (1) VERTICAL COMPARTMENT PEGBOARD DIVIDER
-

COMPARTMENT D5 CONTAINS:
- (1) CAB LIFT CONTROLLER AND REMOTE RECEPTACLE
- (1) CIRCUIT BREAKER PANEL
- (1) GENERATOR METER PANEL
- (1) SUB FEED BOX
- (1) 5-DRAWER C-TECH CABINET
- ALUMINUM PEGBOARD ON REAR WALL OF COMPARTMENT
- (1) COMMAND LIGHT CONTROLLER
- (1) PUMP CONTROL PANEL
-
-

COMPARTMENT D6 CONTAINS:
- (3) 2-WAY ADJ SHELVES
- (1) ELECTRIC CORD REEL WITH 200' OF 10/3 YELLOW CORD
- (1) BACKBOARD RACK
- (1) LITTLE GIANT MODEL 13 LADDER

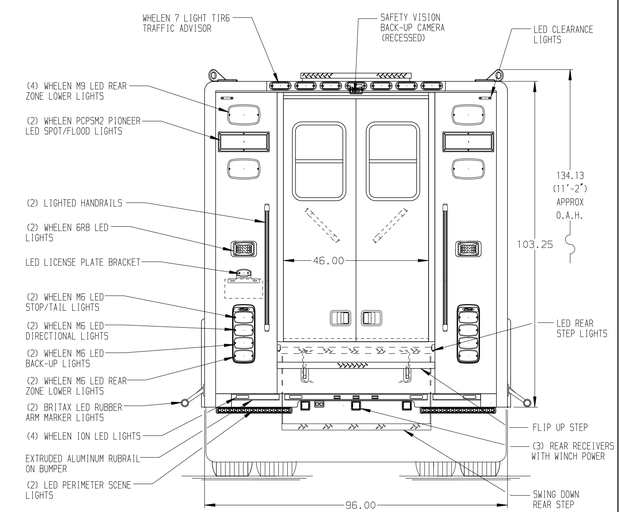

NOTE
DIMENSIONS SHOWN ARE APPROXIMATE AND ARE SUBJECT TO MINOR DEVIATIONS AS MAY OCCUR OR BE NECESSARY IN CONSTRUCTION.
MINOR DETAILS NOT SHOWN.

NOTES:
1. ONAN 35 kW SINGLE PHASE PTO DRIVEN GENERATOR WITH SPLASH GUARD LOCATED BETWEEN THE FRAME RAILS
2. HALE CBP 250 GPM PTO DRIVEN WATER PUMP
3. WARN #9,000 PORTABLE WINCH WITH SYNTHETIC ROPE
4. S/S SCUFFPLATES ON CAB DOOR JAMBS
5. FLOOR IN CAB TO BE PADDED RUBBER
6. KUSSMAUL PUMP PLUS 1200 BATTERY CHARGER LOCATED BEHIND DRIVER'S SEAT
7. (2) 9,000# RECEIVER STYLE TIE DOWNS
8. BRUSHED S/S SCUFFPLATES ON INSIDE OF ALL BODY AND CAB DOOR PANS
9. ALL BODY COMPARTMENTS TO HAVE PIERCE LED STRIP LIGHTS
10. SAFETY VISION CAMERA INSIDE CAB FACING FORWARD

NOTE:
LAP DOORS HAVE BEEN SHOWN IN HIDDEN LINES TO CLEARLY IDENTIFY THE EQUIPMENT IN EACH COMPARTMENT. DASHED LINES ON SIDES ARE DOORS IN OPEN POSITION

CLEAR DOOR WIDTH KEY		REV	DATE	BY	CH
AMDOR ROLL UP DOORS:	-1 7/8"	7	14JUL16	DHE	CDK
GORTITE ROLL UP DOORS:	-2 3/4"	6	08JUL16	DHE	AZU
		5	31MAY16	DHE	AZU
PIERCE DOUBLE LAP DOORS:	-4 1/4"	4	06APR16	DHE	AZU
PIERCE LIFT-UP LAP DOORS:	-1 1/2"	3	04FEB16	DHE	AZU
(EX: 60"F-F - 1 7/8"- 58 1/8" CLEAR) (F-F)= FRAME TO FRAME					

CHASSIS DATA	
MAKE	PIERCE
MODEL	AX4600

Pierce MANUFACTURING INC.

TITLE	HEAVY DUTY RESCUE WALKIN/NON-WALKIN COMBO	JOB NO.	29183
		SCALE 1:24	DATE
FOR	HOLLYWOOD VOLUNTEER FIRE DEPARTMENT HOLLYWOOD,MD RANDY SCHWARTZ	DRAWN BY DHE	19JAN16
		CHECKED BY AZU	19JAN16
DWG NO.	29183AD-SH1	SHEET SIZE D	SHEET NO. 1 OF 1

View File Created 14-JUL-2016 09:28:47