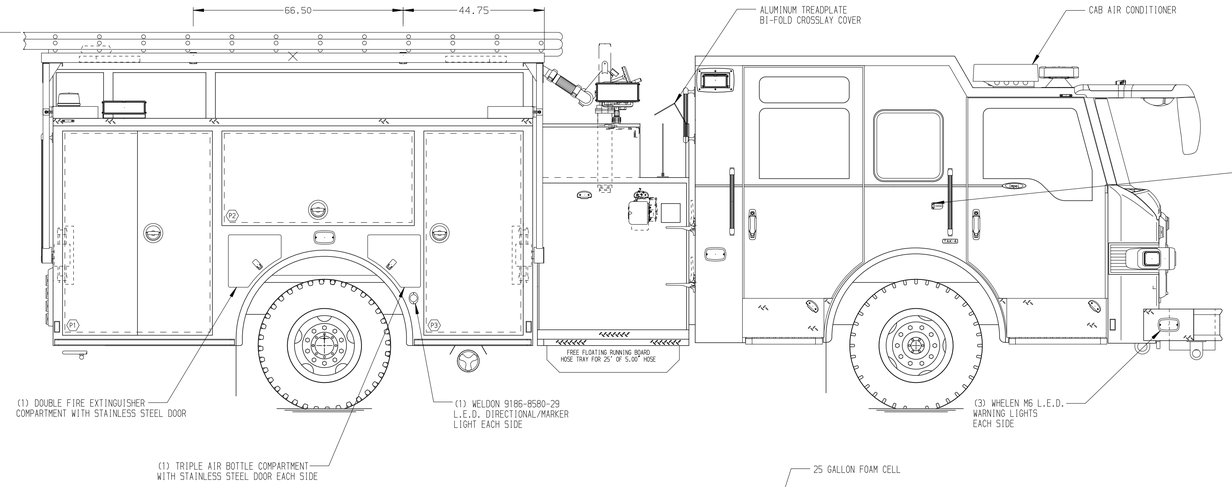

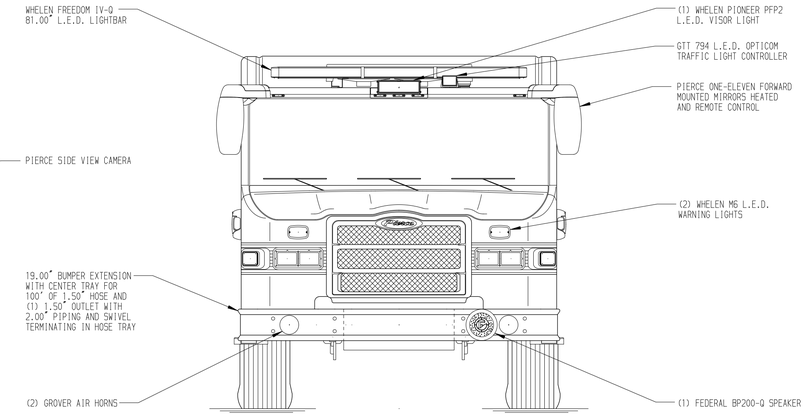

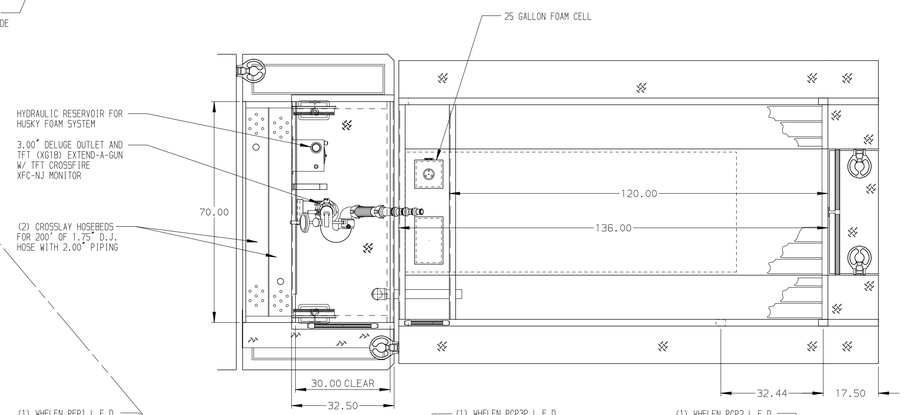

HOSEBED CAPACITIES

1. 250' OF 2.50" D.J. HOSE
2. 150' OF 5.00" D.J. HOSE
3. 1000' OF 5.00" D.J. HOSE
4. 250' OF 2.50" D.J. HOSE

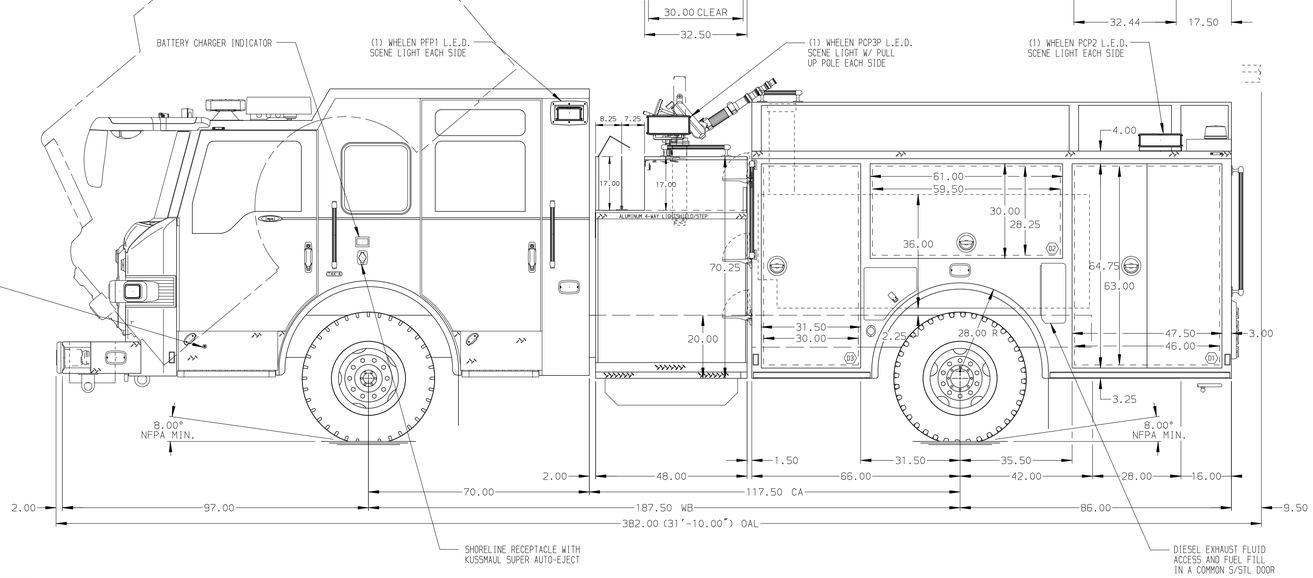

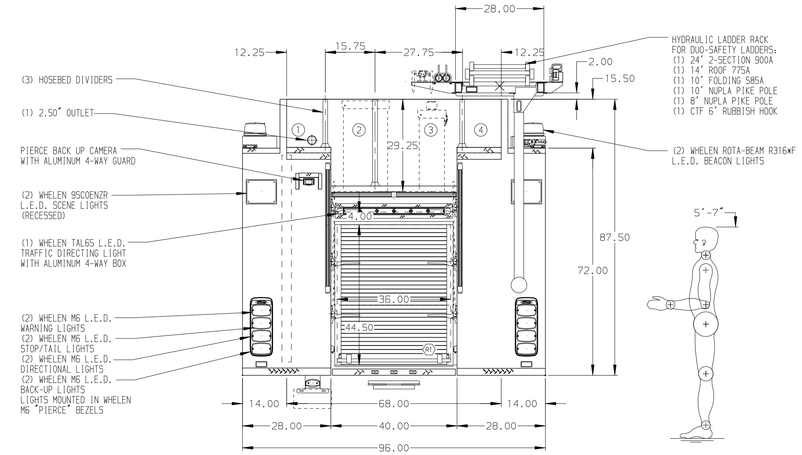

ALUMINUM BODY

NOTE

DIMENSIONS SHOWN ARE APPROXIMATE AND ARE SUBJECT TO MINOR DEVIATIONS AS MAY OCCUR OR BE NECESSARY IN CONSTRUCTION.
MINOR DETAILS NOT SHOWN.

1. HOLDERS FOR (2) ZIAMATIC SAC-44-E WHEEL CHOCKS LOCATED IN COMPARTMENT D3
2. BATTERY CHARGER LOCATED BEHIND DRIVER'S SEAT
3. PULL STRAP ON DOOR IN COMPARTMENTS D2 & P2
4. REVERSED HINGED DOOR ON COMPARTMENT D3
5. THREE 120V DUPLEX RECEPTACLES LOCATED IN CAB
6. ONE FULL WIDTH/DEPTH PAINTED ADJUSTABLE SHELF IN COMPARTMENT P2; TWO IN D1, P1, & P3; THREE IN D3
7. ONE FLOOR MOUNTED SLIDE-OUT TRAY IN COMPARTMENTS D1, P1, & R1
8. SWING-OUT TOOL BOARD WITH PEGBOARD PATTERN IN COMPARTMENT D2
9. NORCOLD NR751BB REFRIGERATOR WITH ADJACENT A/C AND D/C OUTLET LOCATED IN CAB

REV	DATE	BY	CH
1	08FEB16	COL	CHR
2	15DEC15	COL	CHR

CHASSIS DATA
MAKE: PIERCE
MODEL: IMPEL

Pierce MANUFACTURING INC.

TITLE: 1500-D-500 GAL POLY W/25 GAL FOAM CELL, 152" RESCUE (2)XLAYS, DELUGE, HYDRAULIC LADDER RACK

FOR: ROSEBURG FIRE DEPARTMENT
ROSEBURG, OREGON

DWG NO. 29489AD

JOB NO.	29489
SCALE	1:24
DATE	
DRAWN BY	COL 230CT15
CHECKED BY	SMA 260CT15
SHEET SIZE	D
SHEET NO.	1 OF 1

View File Created 09-FEB-2016 14:23:35