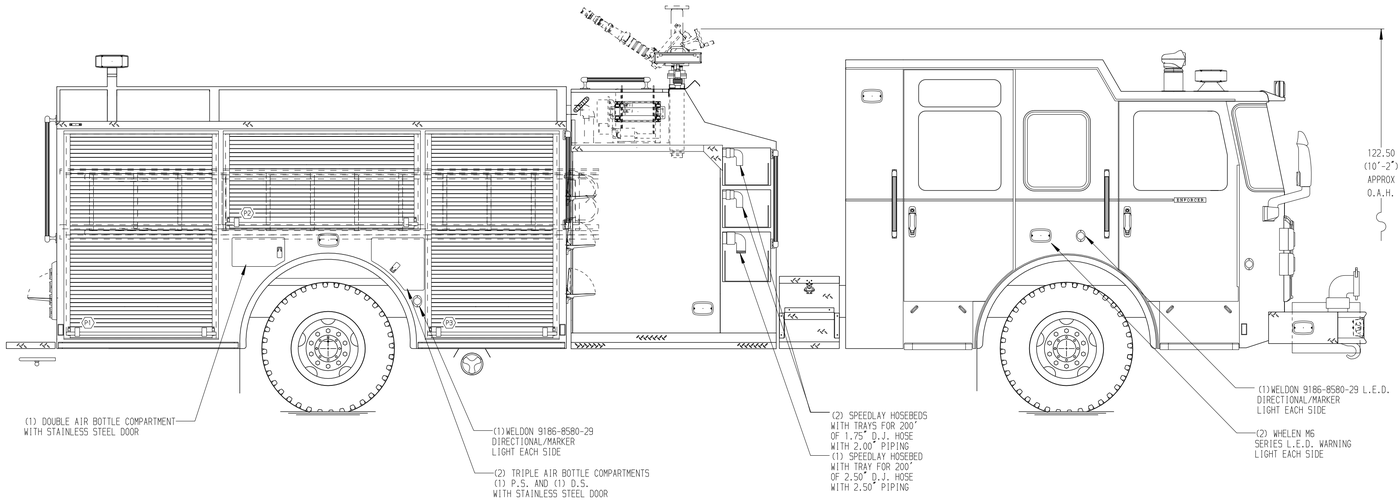

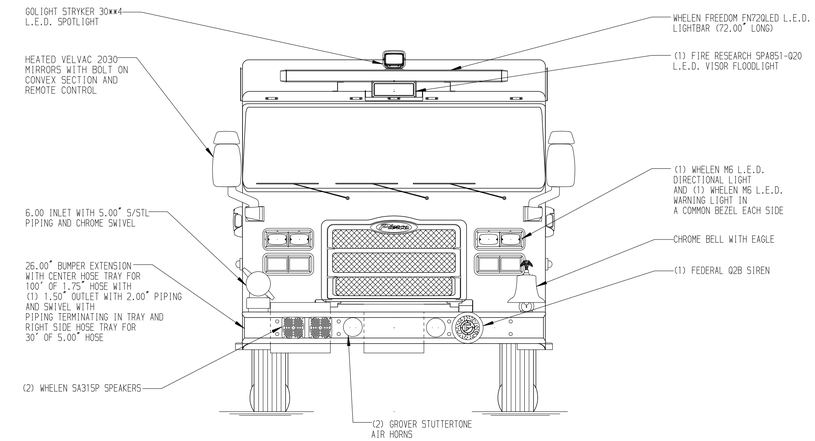

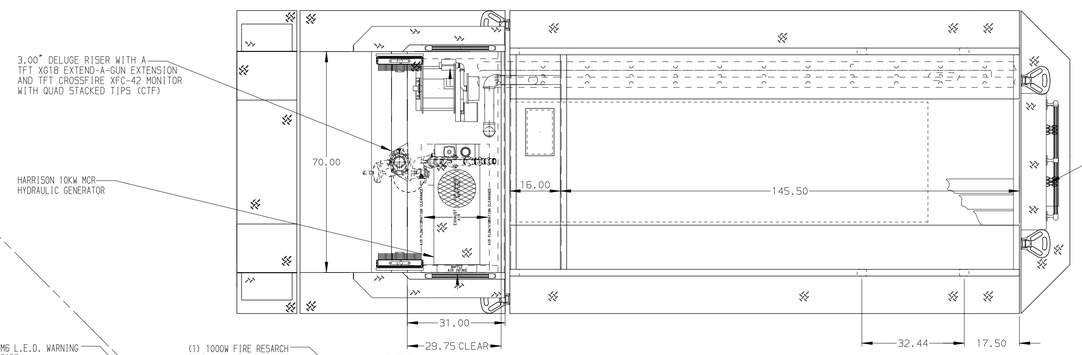

HOSEBED CAPACITIES

1. 150' OF 1.75" DJ POLY HOSE
2. 1200' OF 5.00" DJ POLY HOSE
3. 600' OF 3.00" D.J. POLY HOSE
4. 200' OF 3.00" DJ POLY HOSE

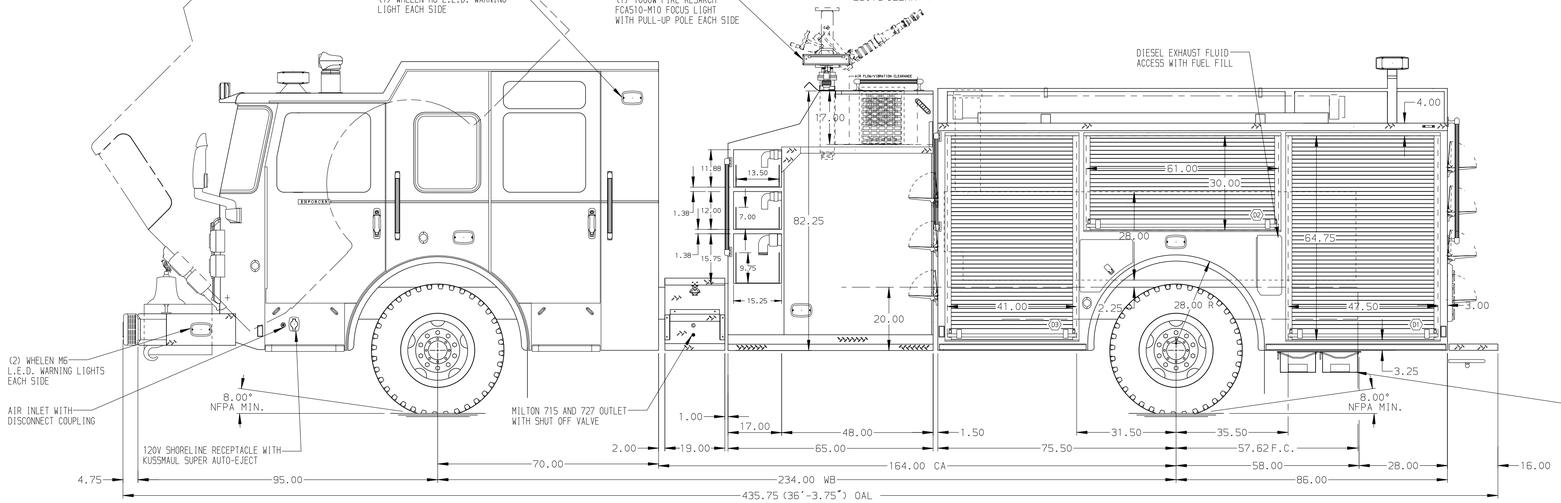

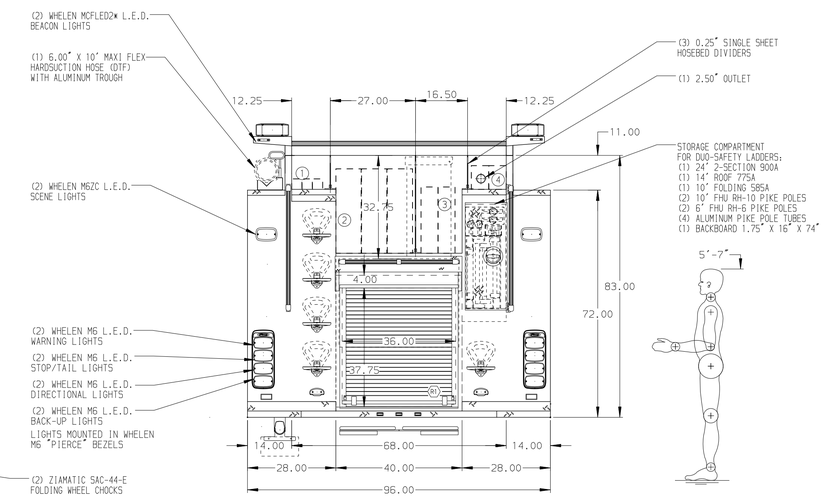

ALUMINUM BODY

SIDE ROLL AND FRONTAL IMPACT PROTECTION

NOTE

DIMENSIONS SHOWN ARE APPROXIMATE AND ARE SUBJECT TO MINOR DEVIATIONS AS MAY OCCUR OR BE NECESSARY IN CONSTRUCTION.
MINOR DETAILS NOT SHOWN.

1. KUSSMAUL BATTERY CHARGER LOCATED BEHIND THE DRIVER'S SEAT
2. BATTERY CHARGE INDICATOR LOCATED ON D.S. SEAT RISER
3. S/STL SCUFFPLATE IN EACH COMPARTMENT DOOR
4. ONE FLOOR MOUNTED SLIDE-OUT TRAY IN R1
5. CIRCUIT BREAKER PANEL IN D3
6. ONE HANNAY ELECTRIC REWIND CORD REEL MODEL 1618-17-18 LOCATED IN P.S. CARGO AREA WITH 200' OF 10/3 CABLE
7. FULL WIDTH/DEPTH ADJUSTABLE SHELVES TWO IN D1,D3,P1,P3 AND ONE IN D2,R1
8. (1) 120V RECEPTACLE IN D3 AND P3
9. (1) (1) 120V DUPLEX RECEPTACLE ON THE OUTSIDE WALL BEHIND THE DRIVERS SEAT

REV	DATE	BY	CH
3	23FEB16	LST	COR
2	26JAN16	LST	JBO
1	09DEC15	LST	MGE

CHASSIS DATA
MAKE: PIERCE
MODEL: ENFORCER

Pierce MANUFACTURING INC.

TITLE: 1500-D-500 GAL POLY,161" D.S. FHFD P.S. FH FDLER (3) SPEEDLAYS,LADDERS BETWEEN TANK AND SIDESHEET

FOR: CITY OF CARMEL FIRE DEPARTMENT
CARMEL,INDIANA

DWG NO.: 29584AD

JOB NO.	29584
SCALE	1:24
DATE	
DRAWN BY	LST 19NOV15
CHECKED BY	MGE 19NOV15
SHEET SIZE	D
SHEET NO.	1 OF 1

View File Created 23-FEB-2016 13:28:38