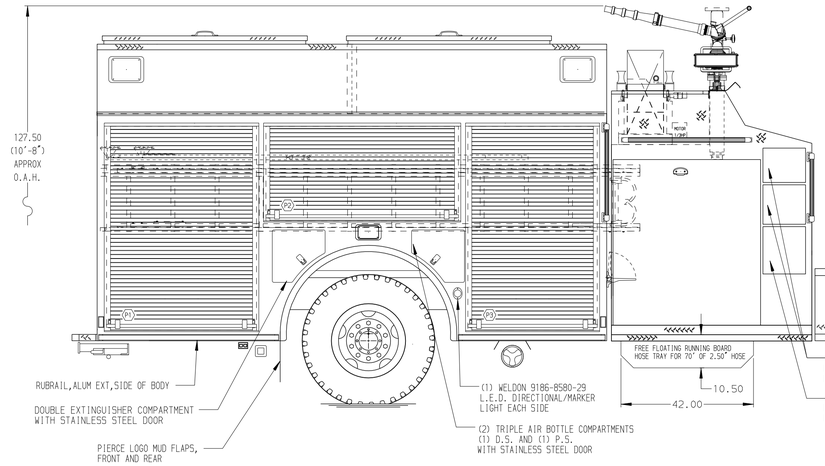

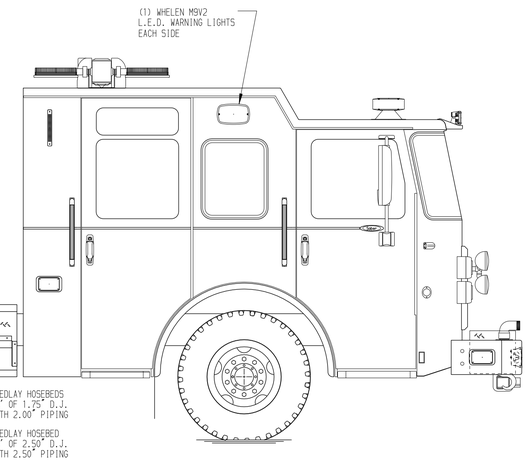

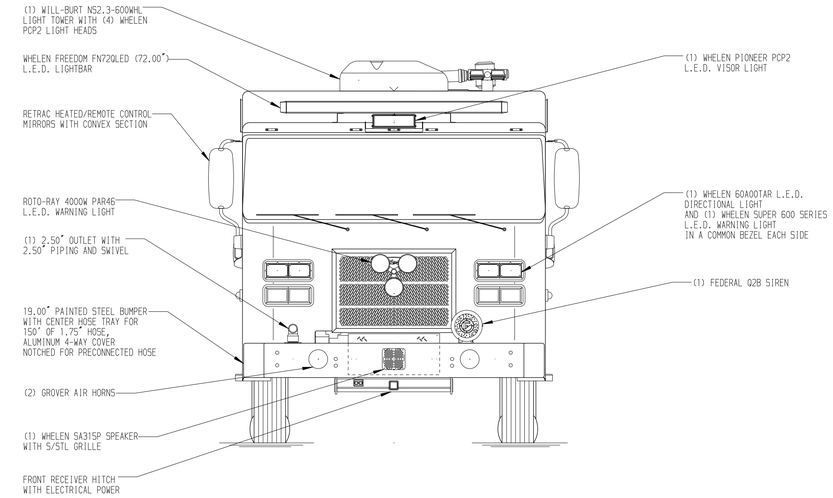

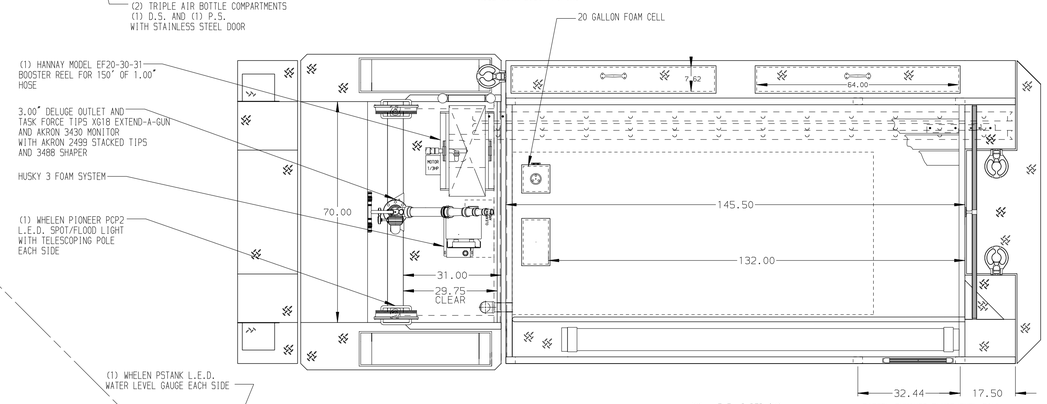

HOSEBED CAPACITIES

1. 200' OF 3.00" D.J. POLY HOSE
2. 1000' OF 5.00" LDH HOSE
3. 400' OF 3.00" D.J. POLY HOSE

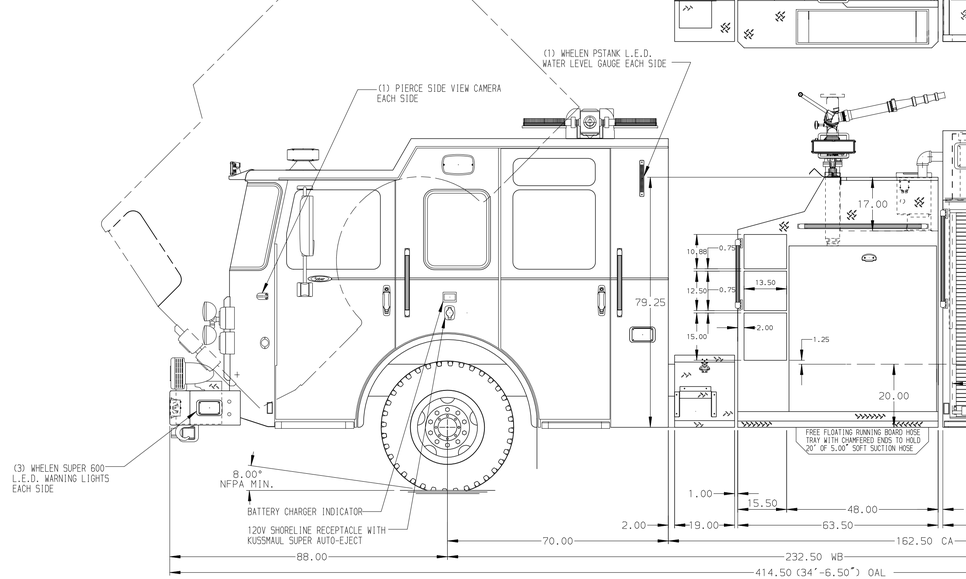

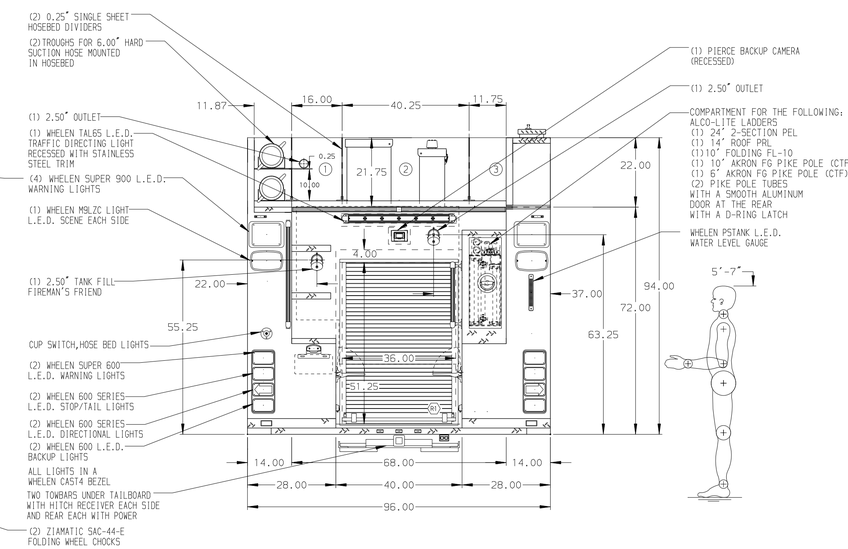

ALUMINUM BODY

SIDE ROLL AND FRONTAL IMPACT PROTECTION

NOTE

DIMENSIONS SHOWN ARE APPROXIMATE AND ARE SUBJECT TO MINOR DEVIATIONS AS MAY OCCUR OR BE NECESSARY IN CONSTRUCTION.
MINOR DETAILS NOT SHOWN.

REV	DATE	BY	CH
V	08FEB16	JLA	RWI
V	07JAN16	JLA	VMO
V	02DEC15	LST	KBO

CHASSIS DATA
MAKE: PIERCE
MODEL: SABER FR

Pierce MANUFACTURING INC.

TITLE: 1500-D-1000P W/20 GAL FOAM CELL, 161" FH FDLER
(3) SPEEDLAYS, LADDERS BETWEEN TANK AND S. SHEET

FOR: SILVER BLUFF FIRE DEPARTMENT
AIKEN, SOUTH CAROLINA

DWG NO.: 29689AD

JOB NO.: 29689
SCALE: 1:24
DATE
DRAWN BY: LST 11NOV15
CHECKED BY: KBO 13NOV15
SHEET SIZE: D
SHEET NO.: 1 OF 1

View File Created 08-FEB-2016 14:35:24