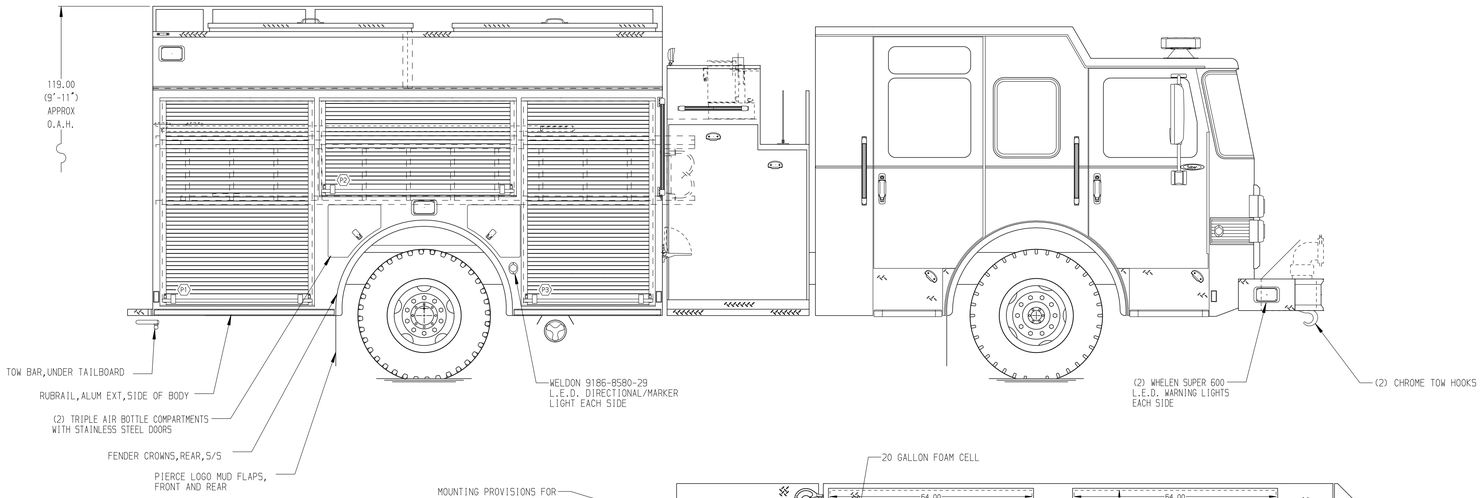

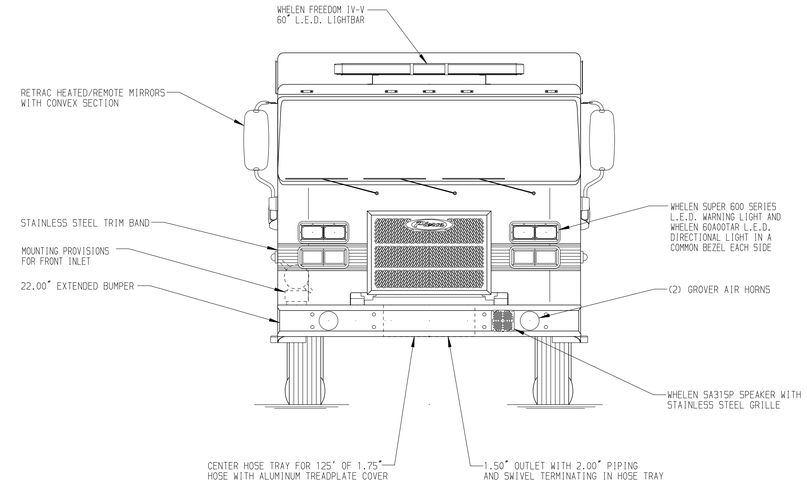

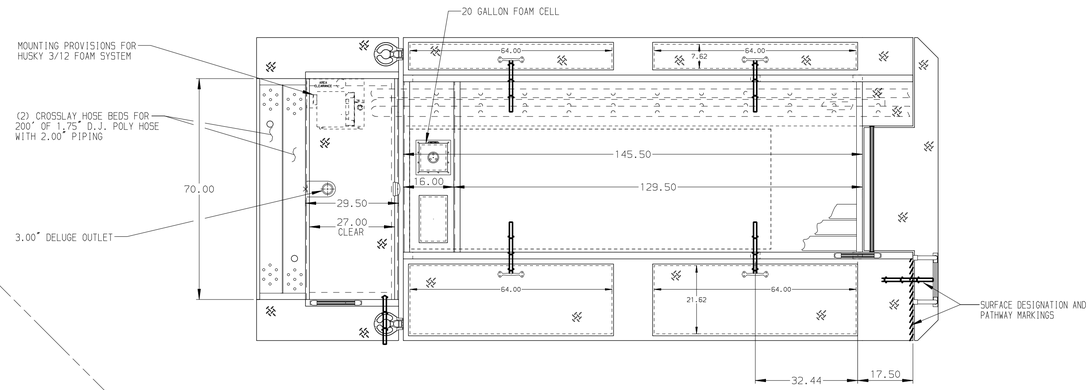

HOSEBED CAPACITIES

1. 500' OF 3.00" D.J. POLY HOSE
2. 1000' OF 5.00" D.J. POLY HOSE
3. 500' OF 3.00" D.J. POLY HOSE

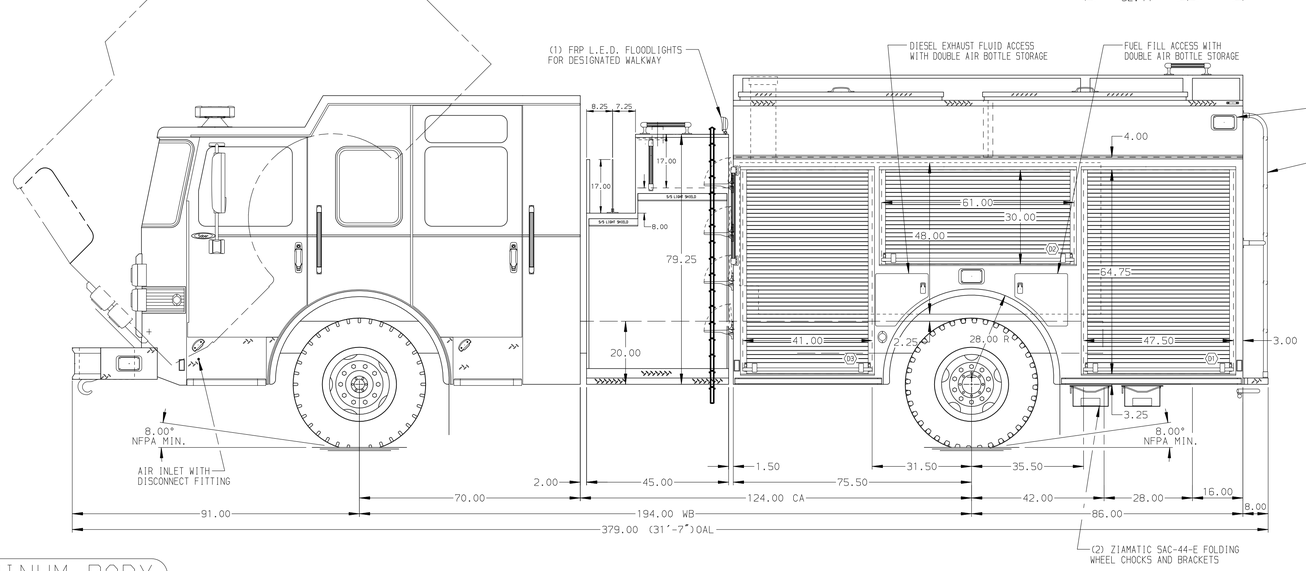

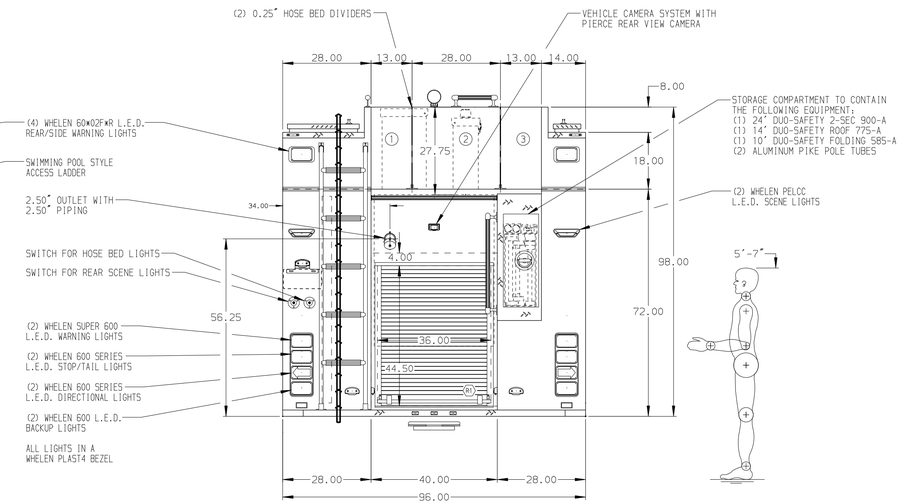

ALUMINUM BODY

NOTE

DIMENSIONS SHOWN ARE APPROXIMATE AND ARE SUBJECT TO MINOR DEVIATIONS AS MAY OCCUR OR BE NECESSARY IN CONSTRUCTION.
MINOR DETAILS NOT SHOWN.

REV	DATE	BY	CH
B	29AUG16	JLA	CAG
A	12JUL16	RWI	CAG

CHASSIS DATA
MAKE: PIERCE
MODEL: SABER FR

Pierce MANUFACTURING INC.

TITLE: 1500-D-750 W/20 GAL. FOAM CELL, 161" BODY, DELUGE CROSSLAYS, LADDERS BETWEEN TANK AND BODY
FOR: PIERCE FIELD UNIT, APPLETON, WI
DWG NO.: 30343AD

JOB NO.	30343
SCALE	1:24
DATE	
DRAWN BY	TES 20MAY16
CHECKED BY	KBO 24MAY16
SHEET SIZE	D
SHEET NO.	1 OF 1

View File Created 29-AUG-2016 09:41:15