PASSENGER'S SIDE COMPARTMENTS CONTAIN THE FOLLOWING:

COMPARTMENT P1 CONTAINS:
- (1) RACK FOR 6 SCBA BOTTLES
- (1) MISCELLANEOUS EQUIPMENT COMPARTMENT
- (1) STD DEPTH ADJ SLIDE OUT/TILT TRAY
-
-
-

COMPARTMENT P2 CONTAINS:
- (1) STORAGE TROUGH 20"X10"X78"
- (2) 2-WAY FLOOR MOUNTED SLIDE OUT TRAYS
- (1) STOKES BASKET RACK
-

COMPARTMENT P3 CONTAINS:
- (1) VERTICAL COMPARTMENT DIVIDER
- (1) FLOOR MOUNTED TRAY W/SIDE SLIDES
- (2) 2-WAY SLIDE OUT TOOLBOARDS
- (1) HORIZONTAL FLOOR EXTENSION
- (2) 2-WAY ADJ SHELVES
-

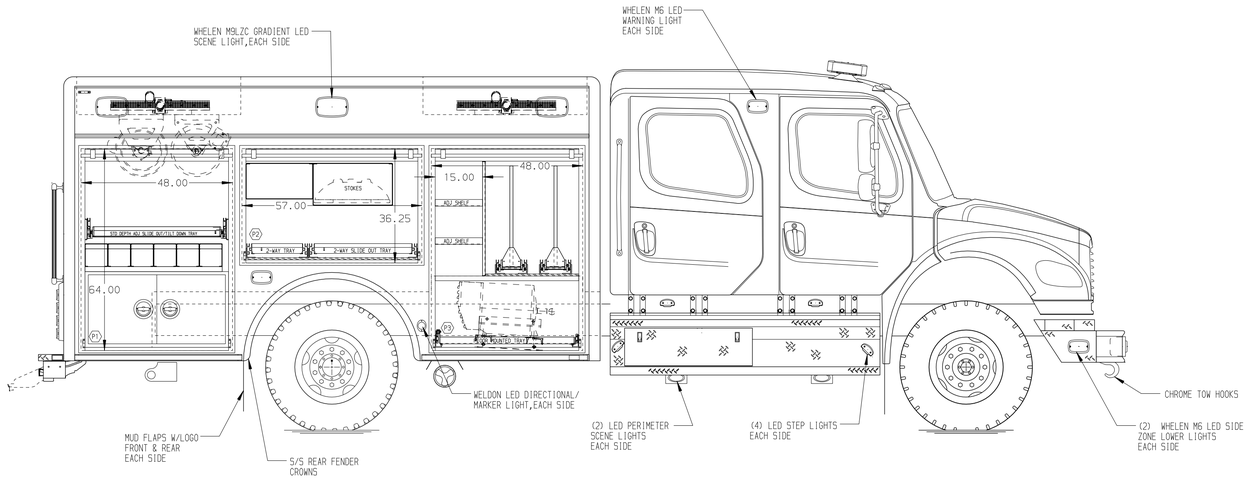

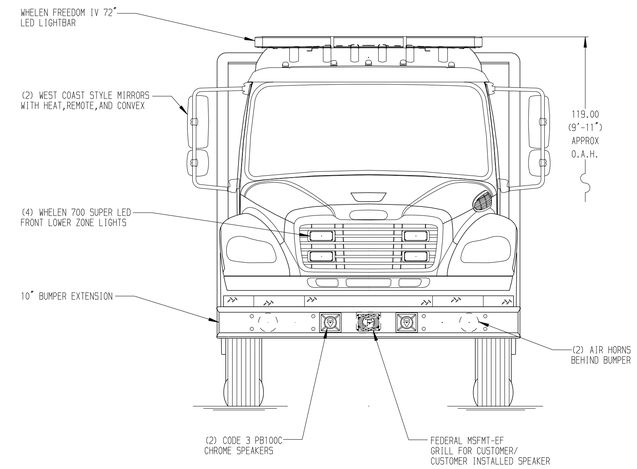

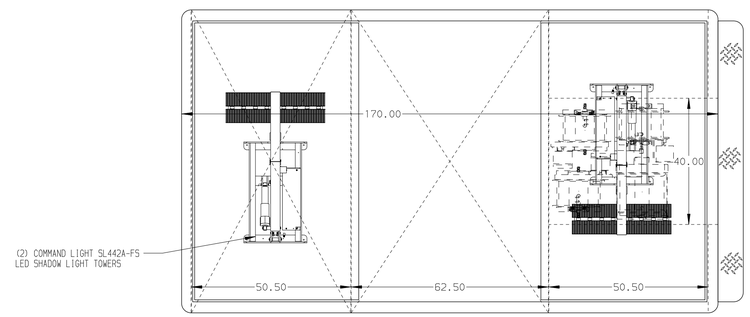

REAR COMPARTMENT CONTAINS THE FOLLOWING:

COMPARTMENT R1 CONTAINS:
- (1) 48"DP ADJ SLIDE OUT TRAY
- (1) FLOOR MOUNTED TRAY W/SIDE SLIDES
- (1) AKRON ELECTRIC CORD REEL WITH 200' OF 10/3 YELLOW CORD
- (1) LOW PRESSURE AIR REEL WITH 200' OF HOSE
- (4) ROLLER GUIDES MOUNTED TO COMPARTMENT WALLS
- (2) HYDRAULIC REELS WITH 100' OF HOSE EACH
- (1) 44"DP ADJ SLIDE OUT/TILT TRAY
-
-
-
-
-

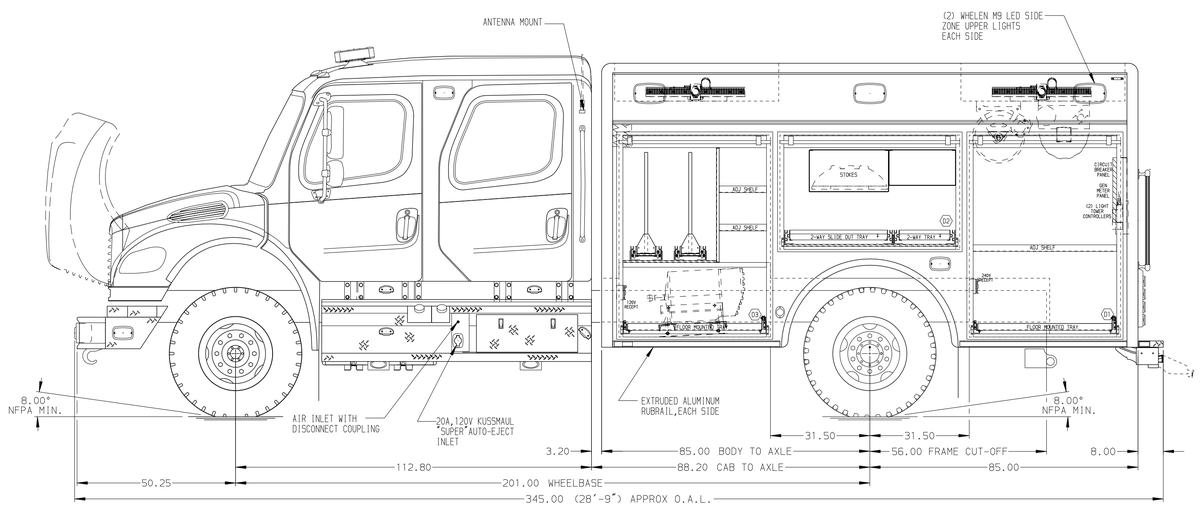

DRIVER'S SIDE COMPARTMENTS CONTAIN THE FOLLOWING:

COMPARTMENT D1 CONTAINS:
- (1) STANDARD DEPTH ADJ SHELF
- (1) FLOOR MOUNTED TRAY W/SIDE SLIDES
- (1) 20A,240V RECEPTACLE WITH SWITCH
- (1) MOUNTING BRACKET FOR HYDRAULIC POWER UNIT
- (1) CIRCUIT BREAKER PANEL
- (1) GENERATOR METER PANEL
- (2) LIGHT TOWER CONTROLLERS
-
-

COMPARTMENT D2 CONTAINS:
- (1) STORAGE TROUGH 20"X10"X78"
- (2) 2-WAY FLOOR MOUNTED SLIDE OUT TRAYS
- (1) STOKES BASKET RACK
-

COMPARTMENT D3 CONTAINS:
- (1) VERTICAL COMPARTMENT DIVIDER
- (1) FLOOR MOUNTED TRAY W/SIDE SLIDES
- (2) 2-WAY SLIDE OUT TOOLBOARDS
- (2) 2-WAY ADJ SHELVES
- (1) HORIZONTAL FLOOR EXTENSION
- (1) 20A,120V DUPLEX RECEPTACLE
-
-
-

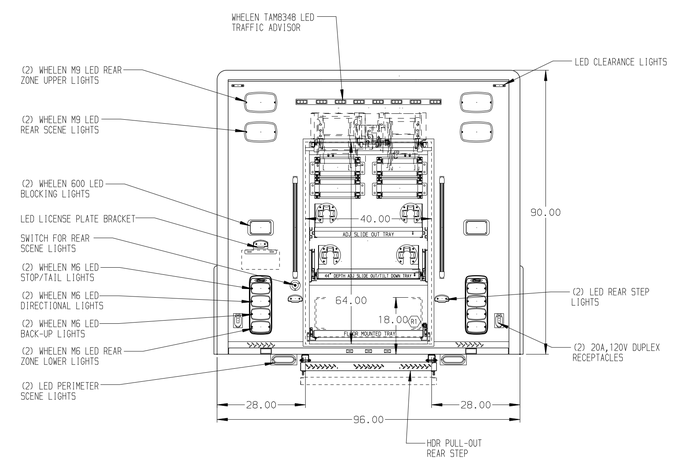

NOTE

DIMENSIONS SHOWN ARE APPROXIMATE AND ARE SUBJECT TO MINOR DEVIATIONS AS MAY OCCUR OR BE NECESSARY IN CONSTRUCTION.
MINOR DETAILS NOT SHOWN.

NOTES:
1. WINCO 35kW SINGLE PHASE PTO DRIVEN GENERATOR LOCATED BETWEEN THE FRAME RAILS
2. WORDEN WHEEL CHOCKS LOCATED IN STEP COMPARTMENT UNDER DRIVER'S SIDE REAR DOOR
3. (2) STREAMLIGHT HANDLIGHTS SHIPPED LOOSE
4. IOTA 45 AMP BATTERY CHARGER LOCATED UNDER REAR DRIVER'S SIDE CREW SEAT
5. SHELF TRACK TO BE SUPPLIED IN COMPARTMENTS D3/P3,D1/P1, AND R1
6. PIERCE DUAL LED LIGHTS IN EACH BODY COMPARTMENT
7. 15A,120V 6-PLACE RECEPTACLE STRIP LOCATED ON REAR OF CENTER CAB CONSOLE

MAXIMUM O.A.H. 10'-0"

CLEAR DOOR WIDTH KEY	
AMDOR ROLL UP DOORS:	-1 7/8"
GORTITE ROLL UP DOORS:	-2 3/4"
PIERCE DOUBLE LAP DOORS:	-4 1/4"
PIERCE LIFT-UP LAP DOORS:	-1 1/2"
(EX: 60"F-F - 1 7/8"= 58 1/8" CLEAR) (F-F)= FRAME TO FRAME	

REV	DATE	BY	CH
7	16MAY17	DHE	CDK
6	15MAY17	DHE	CDK
5	09MAR17	DHE	CDK
4	30JAN17	DHE	AZU

CHASSIS DATA
MAKE: FREIGHTLINER
MODEL: M2-106
DWG NO.: 30427AD

Pierce MANUFACTURING INC.

TITLE: HEAVY DUTY RESCUE NON-WALKIN
FOR: AMHERST FIRE DEPARTMENT, AMHERST, OH — RONALD SNIZEK

JOB NO.	30427
SCALE	1:24
DRAWN BY	DHE
DATE	18DEC17
CHECKED BY	CDK
DATE	20JAN17
SHEET SIZE	D
SHEET NO.	1 OF 1

View File Created 16-MAY-2017 07:58:18