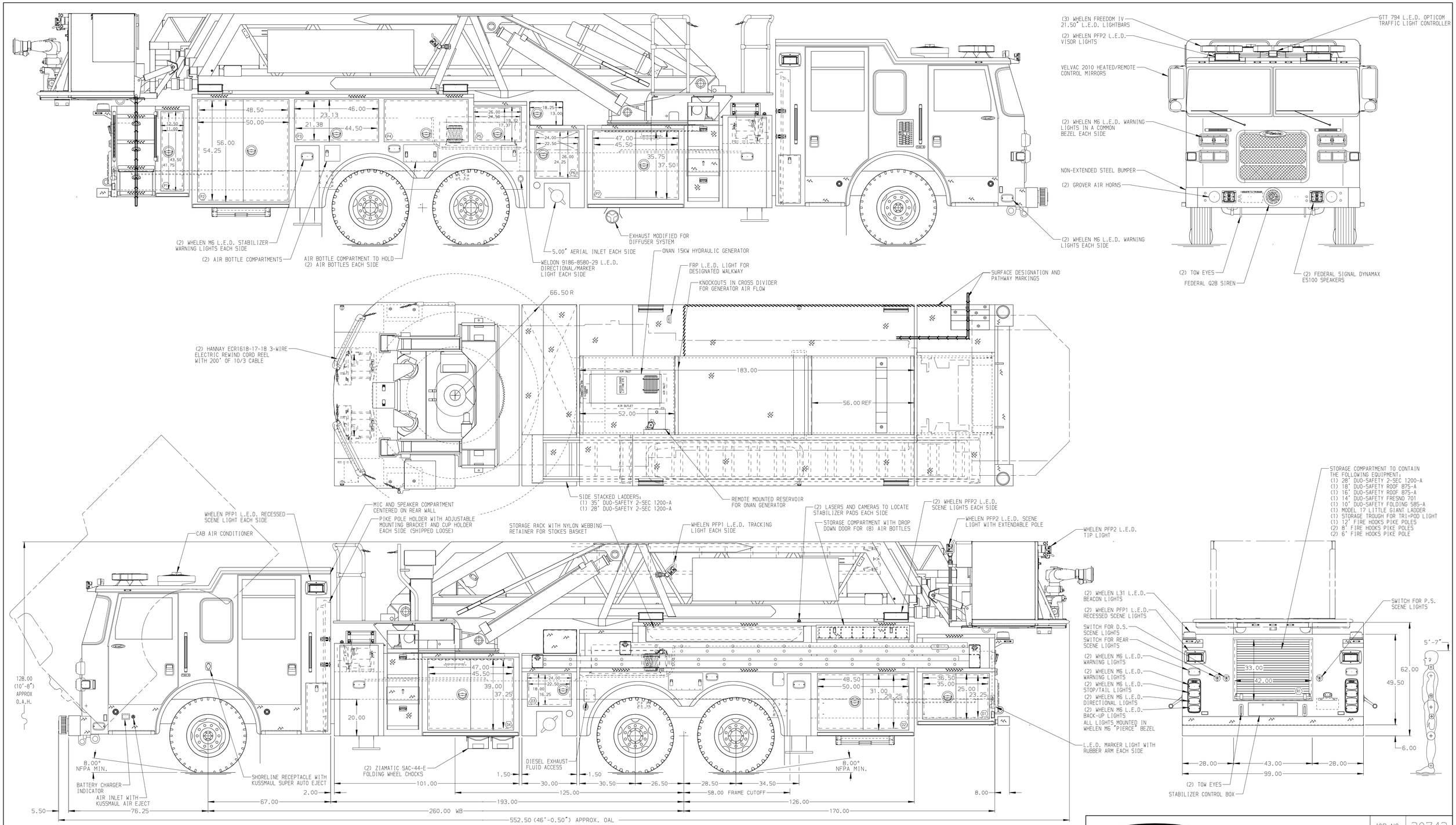

ALUMINUM BODY

SIDE ROLL & FRONTAL IMPACT PROTECTION

NOTE

DIMENSIONS SHOWN ARE APPROXIMATE AND ARE SUBJECT TO MINOR DEVIATIONS AS MAY OCCUR OR BE NECESSARY IN CONSTRUCTION.
MINOR DETAILS NOT SHOWN.

1. MOUNTING BRACKETS AT THE AERIAL FLY SECTION FOR A SPECIAL WIDTH 14' 775-A ROOF LADDER
2. HOSE STORAGE BOX AT PLATFORM BASKET FOR 50' OF 1.75" HOSE
3. ALUMINUM TREADPLATE ON CAB ROOF
4. BATTERY CHARGER LOCATED IN COMPARTMENT-D4
5. ONE FULL WIDTH/DEPTH ADJUSTABLE SHELF WITH SIDES IN COMPARTMENT-D1,D2,P1,P7
6. ONE ADJUSTABLE SLIDE-OUT TRAY WITH SIDES IN COMPARTMENT-D1,D2,P2,P7
7. ONE ADJUSTABLE TILT/SLIDE-OUT TRAY IN COMPARTMENT-P3,P4
8. ONE FLOOR MOUNTED SLIDE-OUT TRAY WITH SIDES IN COMPARTMENT-D1,D2,P2
9. MIC AND SPEAKER COMPARTMENT RECESSED IN THE REAR WALL OF THE CAB
10. CIRCUIT BREAKER PANEL LOCATED IN COMPARTMENT-D4
11. ONE DUPLEX RECEPTACLE IN COMPARTMENT-D1,D2
12. MOUNTING BRACKETS AT THE AERIAL FLY SECTION FOR 6' FIRE HOOKS PIKE POLE
13. TECNIQ L.E.D. RUNG STYLE LIGHTING ON BASE AND FLY AERIAL LADDER SECTIONS
14. AC POWER TO AERIAL TIP
15. TWO WHELEN PFP1 L.E.D. SCENE LIGHTS MOUNTED UNDER BASKET
16. FIRE RESEARCH 2-WAY RADIO INTERCOM SYSTEM
17. AERIAL PEDESTAL RAISED 10.00"
18. 3-IN-1 LYFE BRACKETS AT AERIAL BASKET
19. ONE ADJUSTABLE ONE-WAY UTILITY TRAY WITH SIDES IN COMPARTMENT-P6

REV	DATE	BY	CH
5	05JUN17	BST	GHO
4	16MAY17	BST	GHO
3	22MAR17	BST	GRM

CHASSIS DATA
MAKE: PIERCE
MODEL: ARROWXT

Pierce MANUFACTURING INC.

TITLE: 95' MMSP AERIAL LADDER PLATFORM AND BODY ASSEMBLY
NO PUMP-NO TANK

FOR: GREENWICH FIRE DEPARTMENT
GREENWICH, CT

DWG NO.: 30743AD

JOB NO.	30743
SCALE	1:24
DATE	
DRAWN BY	BST 13MAR17
CHECKED BY	CRI 14MAR17
SHEET SIZE	D
SHEET NO.	1 OF 1

View File Created 06-JUN-2017 05:52:24