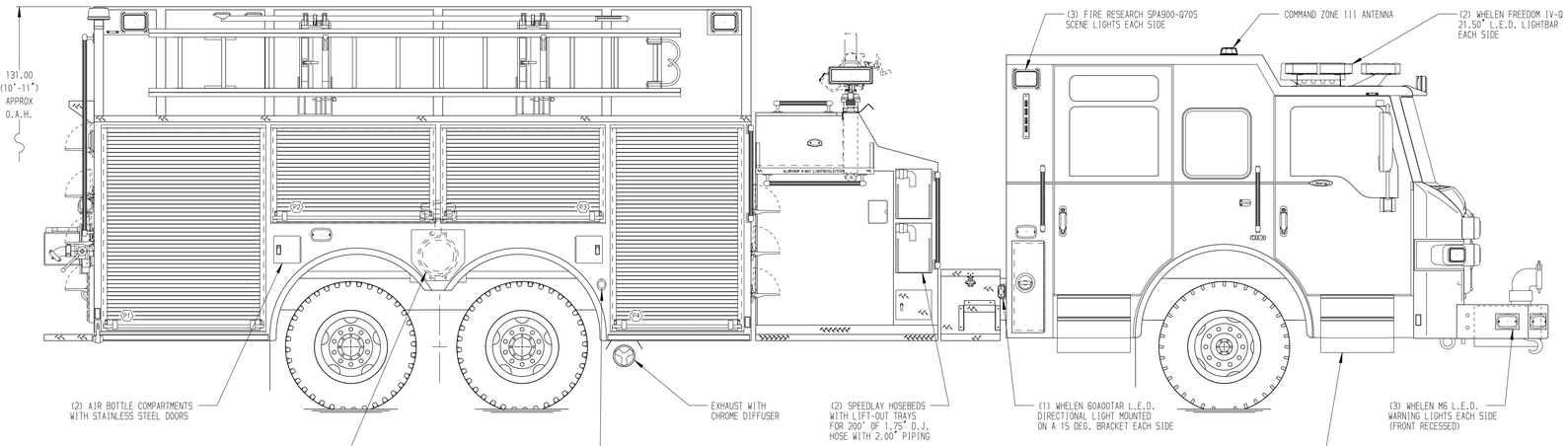

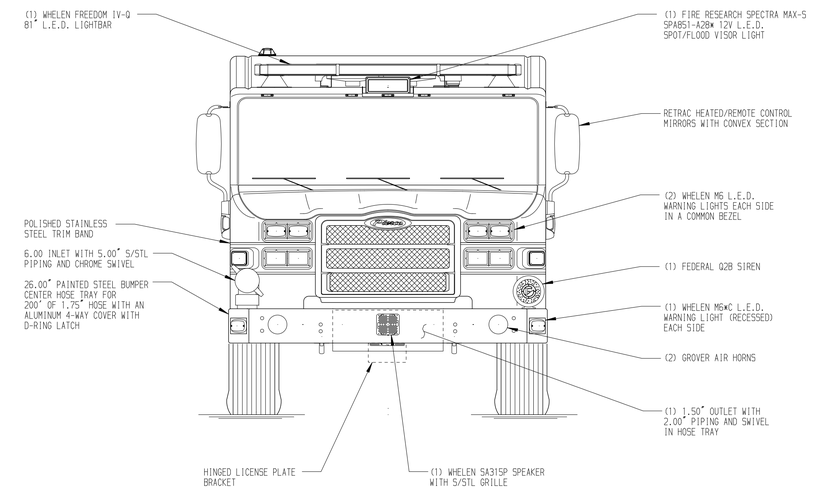

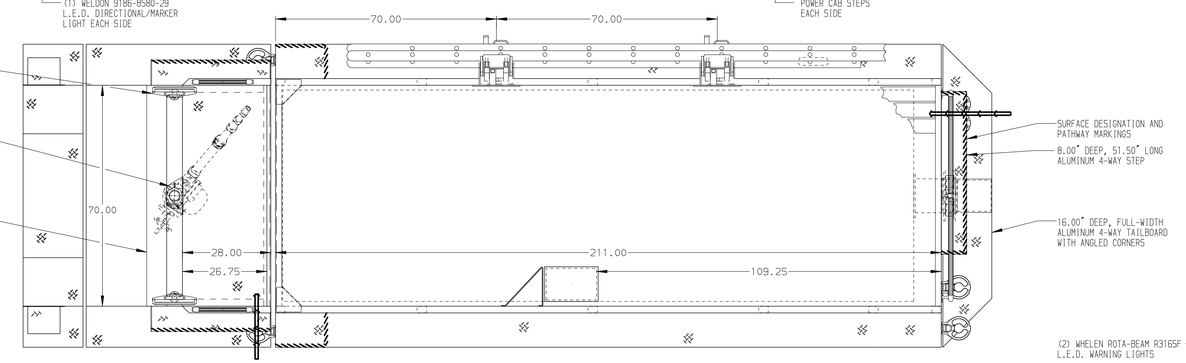

HOSEBED CAPACITIES

1. 1500' OF 5.00" D.J. HOSE
2. 500' OF 2.50" D.J. HOSE
3. 500' OF 1.75" D.J. HOSE

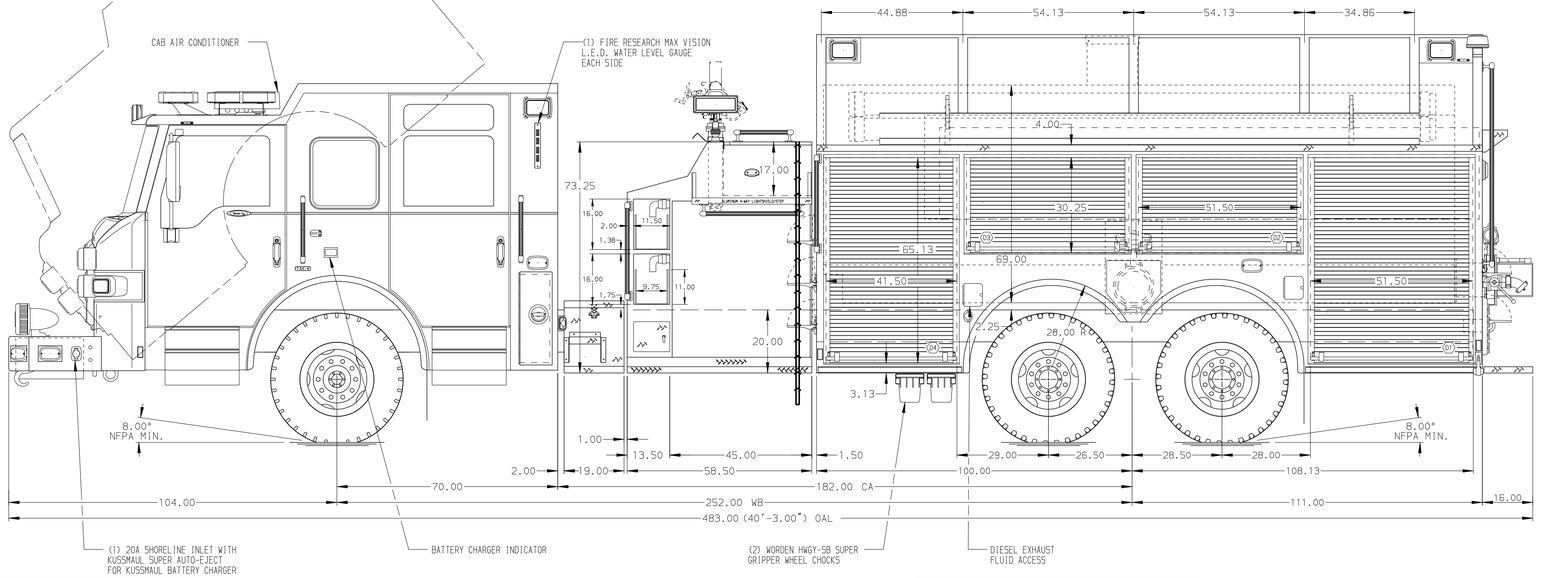

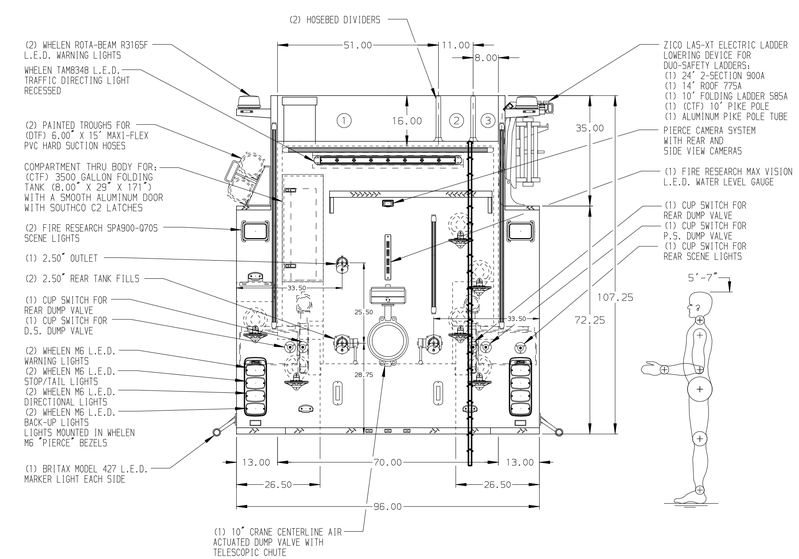

ALUMINUM BODY

MAXIMUM O.A.H. 138.00"

NOTE

DIMENSIONS SHOWN ARE APPROXIMATE AND ARE SUBJECT TO MINOR DEVIATIONS AS MAY OCCUR OR BE NECESSARY IN CONSTRUCTION.
MINOR DETAILS NOT SHOWN.

1. KUSSMAUL 1200 BATTERY CHARGER LOCATED BEHIND DRIVER'S SEAT
2. ONE ADJUSTABLE FULL WIDTH/DEPTH SHELF IN COMPARTMENTS P1 & P4; TWO IN D1 & D4
3. ONE ADJUSTABLE SLIDE-OUT TRAY IN COMPARTMENTS D4, P1 & P4
4. ONE SWING-OUT ALUMINUM PEG BOARD TOOL BOARD IN COMPARTMENTS D2 & D3
5. HOSE STORAGE RACK WITH (6) ADJUSTABLE PARTITIONS TO HOLD (5) ROLLS OF HOSE IN COMPARTMENT D1
6. KUSSMAUL AIR COMPRESSOR IN COMPARTMENT P4
7. ONE 15A, 120V 7-PLACE RECEPTACLE STRIP IN COMPARTMENT D4 AND D.S. EMS CABINET

REV	DATE	BY	CH
5	17APR17	NPA	DTS
4	16MAR17	NPA	DTS
3	02FEB17	NPA	CSH

CHASSIS DATA
MAKE: PIERCE
MODEL: VELOCITY FR

Pierce MANUFACTURING INC.

TITLE: 2000-D-3000 GAL POLY, 211" FH FDLER, TOP CONTROL (2) SPEEDLAYS, ZICO LADDER RACK, DELUGE

FOR: MAURICE RIVER TOWNSHIP FIRE DISTRICT #1
LEESBURG, NEW JERSEY

DWG NO. 30898AD

JOB NO.	30898
SCALE	1:24
DATE	
DRAWN BY	NPA 27JAN17
CHECKED BY	CSH 27JAN17
SHEET SIZE	D
SHEET NO.	1 OF 1

View File Created 17-APR-2017 07:53:49