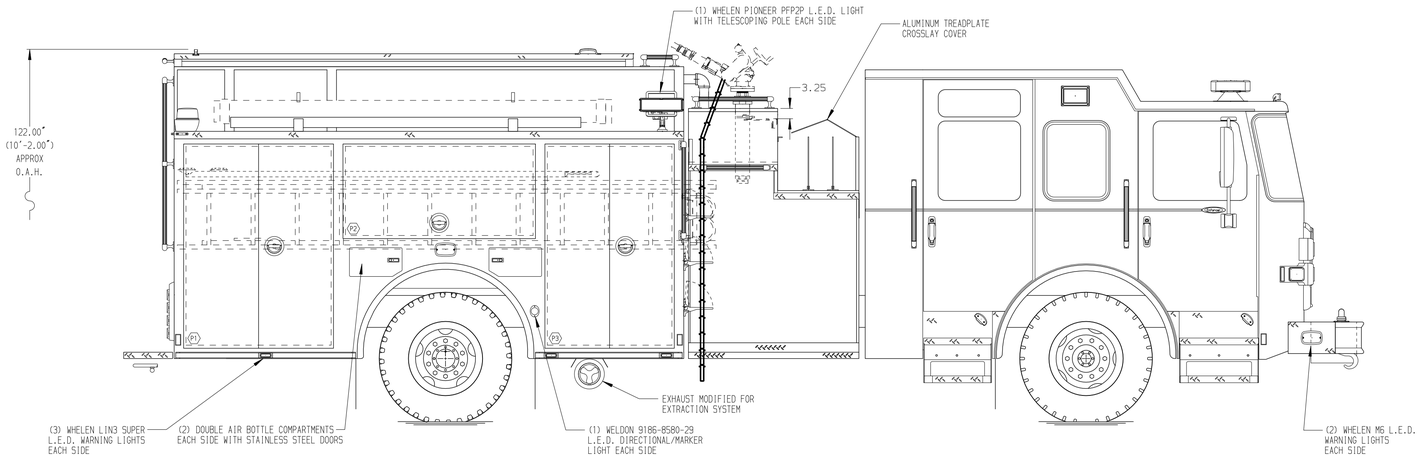

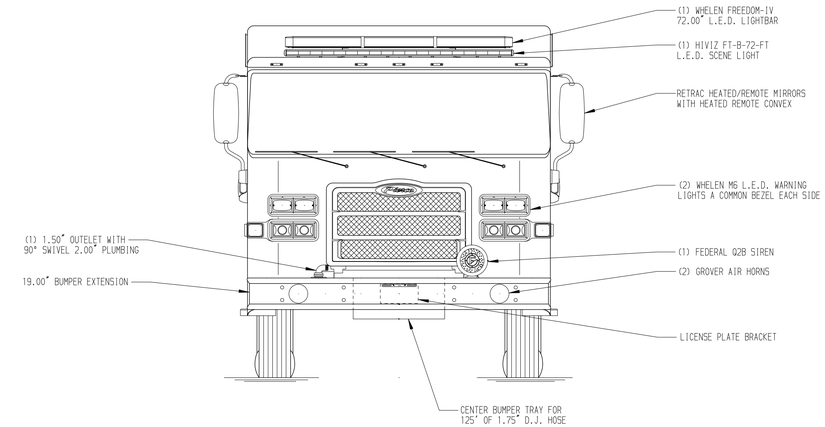

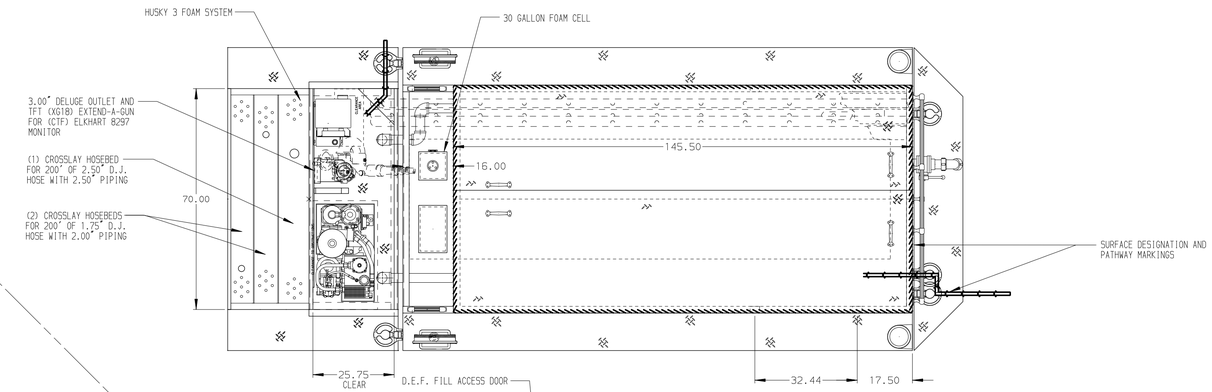

HOSEBED CAPACITIES

1. - 600' OF 2.50" D.J. HOSE
2. -1500' OF 4.00" LDH
3. - 600' OF 1.75" D.J. HOSE

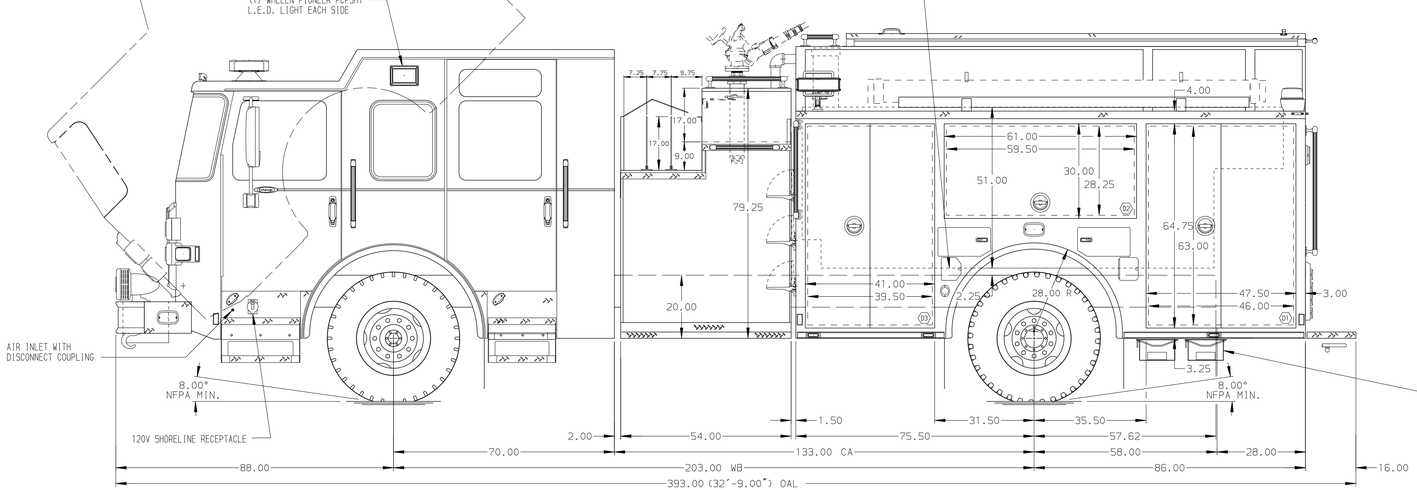

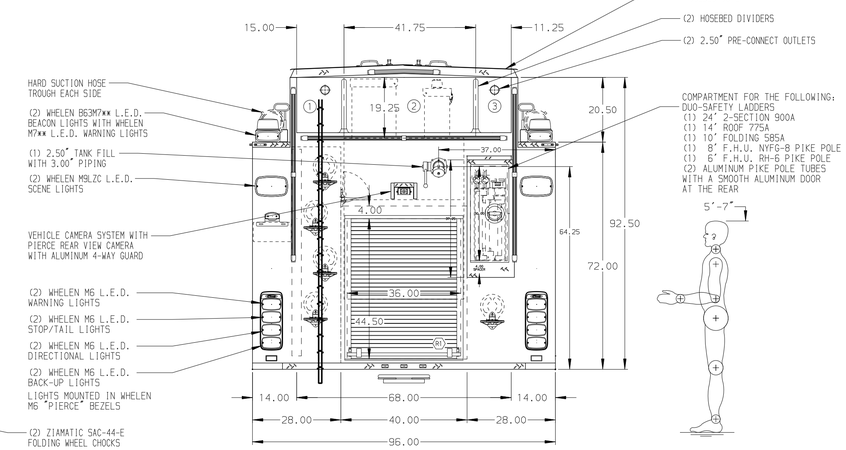

ALUMINUM BODY

MAXIMUM OVERALL HEIGHT 120.00"

NOTE

DIMENSIONS SHOWN ARE APPROXIMATE AND ARE SUBJECT TO MINOR DEVIATIONS AS MAY OCCUR OR BE NECESSARY IN CONSTRUCTION.
MINOR DETAILS NOT SHOWN.

1. BATTERY CHARGER LOCATED IN COMPARTMENT D3
2. BATTERY CHARGE INDICATOR LOCATED ON DRIVER'S SEAT RISER
3. DUAL L.E.D. LIGHT STRIPS LOCATED IN HOSE BED
4. DRIP PAN GUARD FOR ROLL-UP DOOR LOCATED ABOVE R1
5. ONE FLOOR MOUNTED SLIDE-OUT TRAY IN COMPARTMENT D3 & R1
6. ALUMINUM SWING-OUT TOOLBOARD WITH PAC TRAC IN COMPARTMENT D2
7. 140 CFM COMPRESSED AIR FOAM SYSTEM
8. ONSPOT AUTOMATIC TIRE CHAINS TO BE PROVIDED AT REAR
9. PAC TRAC ON COMPARTMENT WALLS IN D2 AND P2
10. TWO FULL WIDTH / DEPTH ADJUSTABLE SHELVES IN COMPARTMENTS D1, D3, P1, AND P3

REV	DATE	BY	CH
3	10MAY17	GVH	PPE
2	07APR17	GVH	PPE
1	03MAR17	GVH	KBO

CHASSIS DATA — MAKE: PIERCE — MODEL: ENFORCER

Pierce MANUFACTURING INC.

TITLE: 1250-D-970GAL WATER, 30GAL FOAM, 161" RESCUE/FDLER (3) CROSSLAYS, CAFS 140, HUSKY 3, A/C, SIDE CONTROL

FOR: NORTHAMPTON FIRE DEPARTMENT, NORTHAMPTON, MA

DWG NO.: 31041AD

JOB NO.	31041
SCALE	1:24
DATE	
DRAWN BY	GVH — 24FEB17
CHECKED BY	KBO — 24FEB17
SHEET SIZE	D
SHEET NO.	1 OF 1

View File Created 11-MAY-2017 09:56:32