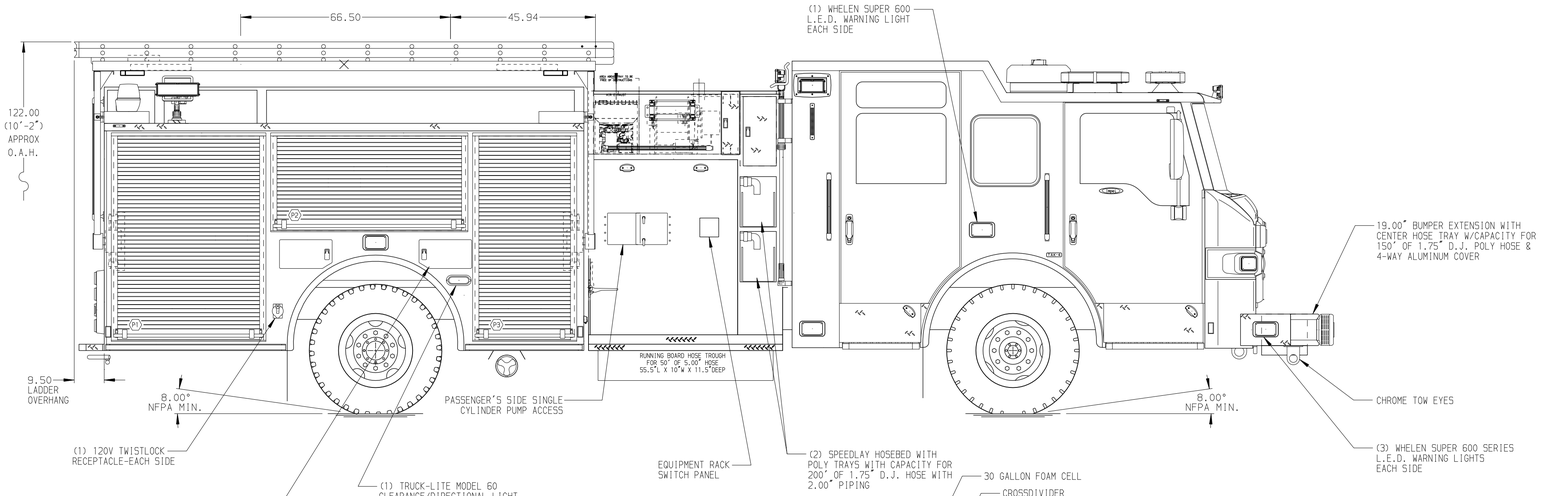

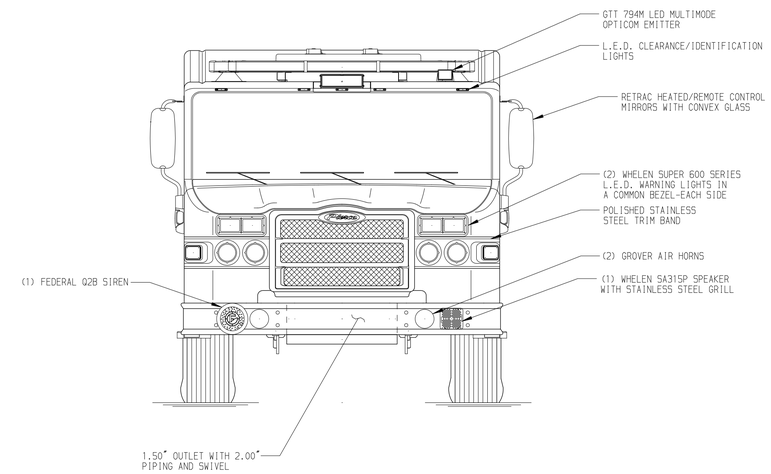

HOSEBED CAPACITIES

1. 200' OF 2.50" D.J. POLY HOSE
2. 1000' OF 4.00" D.J. POLY HOSE
3. 700' OF 2.50" D.J. POLY HOSE

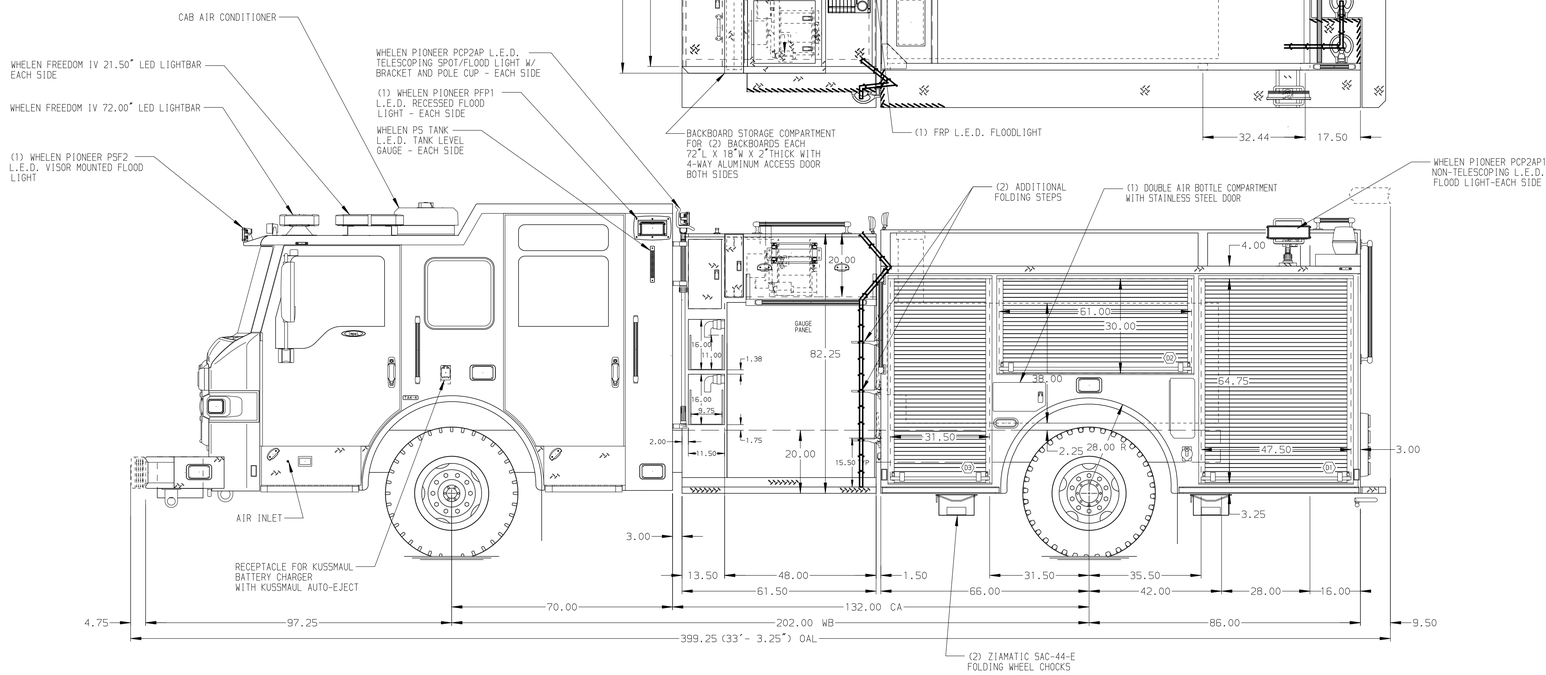

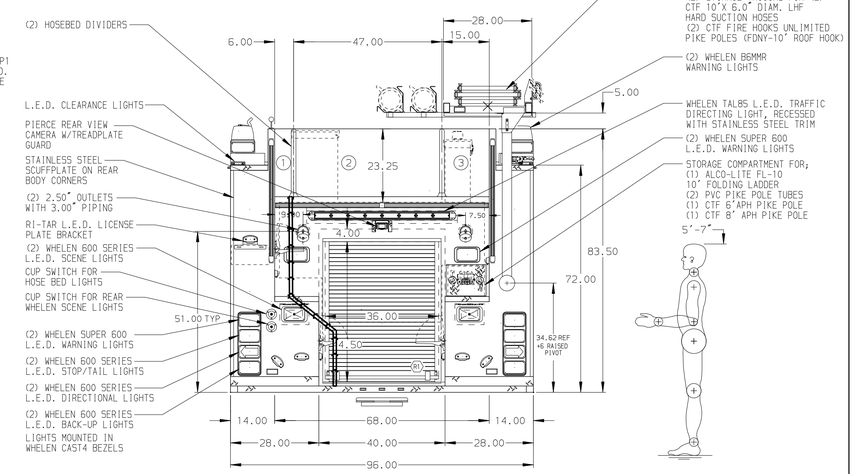

ALUMINUM BODY

NOTE

DIMENSIONS SHOWN ARE APPROXIMATE AND ARE SUBJECT TO MINOR DEVIATIONS AS MAY OCCUR OR BE NECESSARY IN CONSTRUCTION.
MINOR DETAILS NOT SHOWN.

NOTES:

1. AIR INLET WITH DISCONNECT LOCATED ON D.S. STEP WELL
2. AIR OUTLET W/PARATECH AIR FITTING & SHUT-OFF VALVE LOCATED ON D.S. PUMP PANEL
3. PIERCE L.E.D. DUAL LIGHT STRIPS IN ALL REAR BODY COMPARTMENTS
4. TWO BIN MAP BOX SHIPPED LOOSE
5. DUAL MODULE VEHICLE DATA RECORDER
6. KUSSMAUL BATTERY CHARGER LOCATED IN CREW CAB SEAT RISER
7. BATTERY CHARGE INDICATOR LOCATED IN D.S. STEP WELL
8. KUSSMAUL NAV-PAC DC POWER CONDITIONER LOCATED IN CAB
9. S/STL ROLL-UP DOOR GUARDS FOR ALL REAR BODY COMPARTMENTS
10. LOCKING LIFT BAR ON ROLL-UP DOOR FOR ALL REAR BODY COMPARTMENTS
11. PULL STRAP ON DOOR IN COMPARTMENT D1, D2, D3, P1, P2 & P3
12. ONE FLOOR MOUNTED TRAY LOCATED IN COMARTMENT R1
13. ONE VERTICAL PARTITION IN COMPARTMENT D1
14. ONE ADJUSTABLE SHELF LOCATED IN COMPARTMENT D1, P2, TWO IN D3 AND THREE IN P3
15. ONE MOUNTING PLATE LOCATED IN COMPARTMENTS D1, D2, D3 AND P1
16. EXTERNAL FOAM SYSTEM
17. CIRCUIT BREAKER PANEL LOCATED IN COMPARTMENT D3
18. TRIDENTFOLDING STEPS WITH L.E.D. LIGHT

REV	DATE	BY	CH
V	23MAY17	JWO	SHA
V	27APR17	BST	SHA
V	06MAR17	JWO	JBL

CHASSIS DATA
MAKE: PIERCE
MODEL: IMPEL

Pierce MANUFACTURING INC.

TITLE: 1250-D-780P 152 BDY F HT FRT & REAR, FDLER, DS & PS
HYD EQUIPMENT RACK, 10K HYD GENERATOR, 30G FOAM CELL

FOR: SEMINOLE COUNTY FIRE DEPARTMENT
SANFORD, FLORIDA

DWG NO.: 31042AD

JOB NO.	31042 01-02
SCALE	1:24
DATE	
DRAWN BY	JWO 22FEB17
CHECKED BY	JBL 24FEB17
SHEET SIZE	D
SHEET NO.	1 OF 1

View File Created 23-MAY-2017 08:45:49