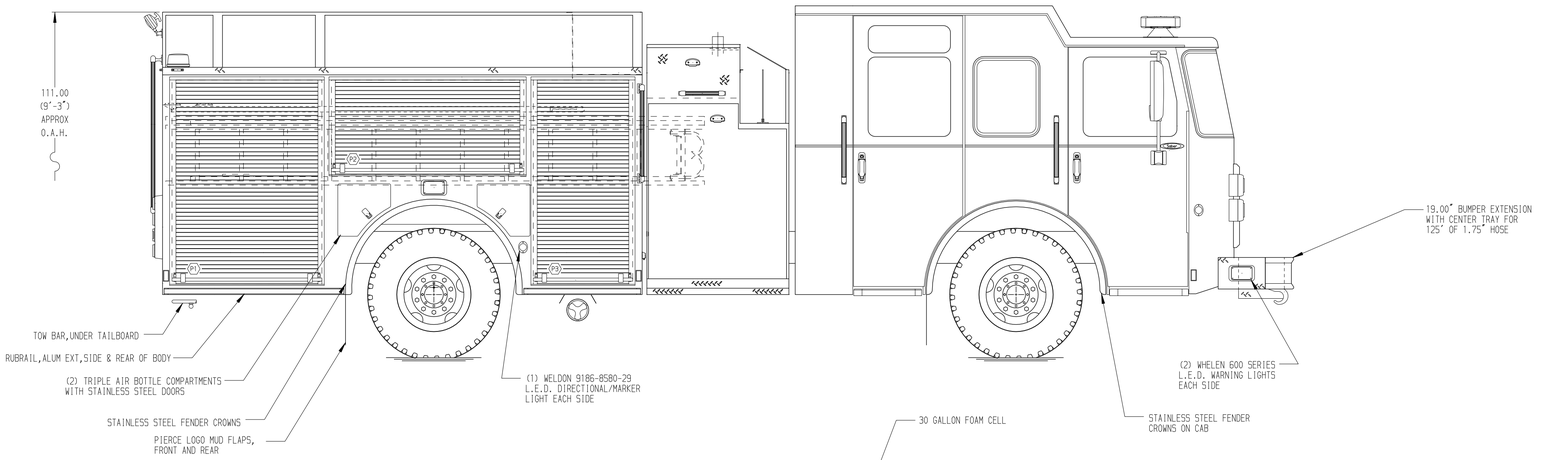

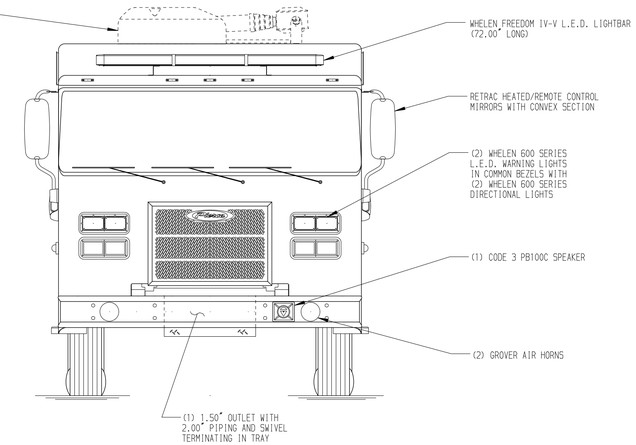

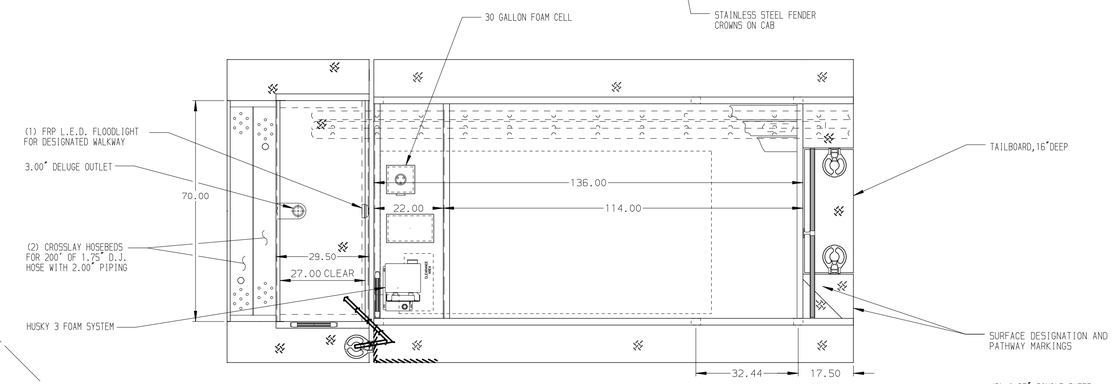

HOSEBED CAPACITIES

1. 500' OF 3.00" D.J.POLY HOSE
2. 1000' OF 5.00" D.J.POLY HOSE
3. 500' OF 3.00" D.J.POLY HOSE

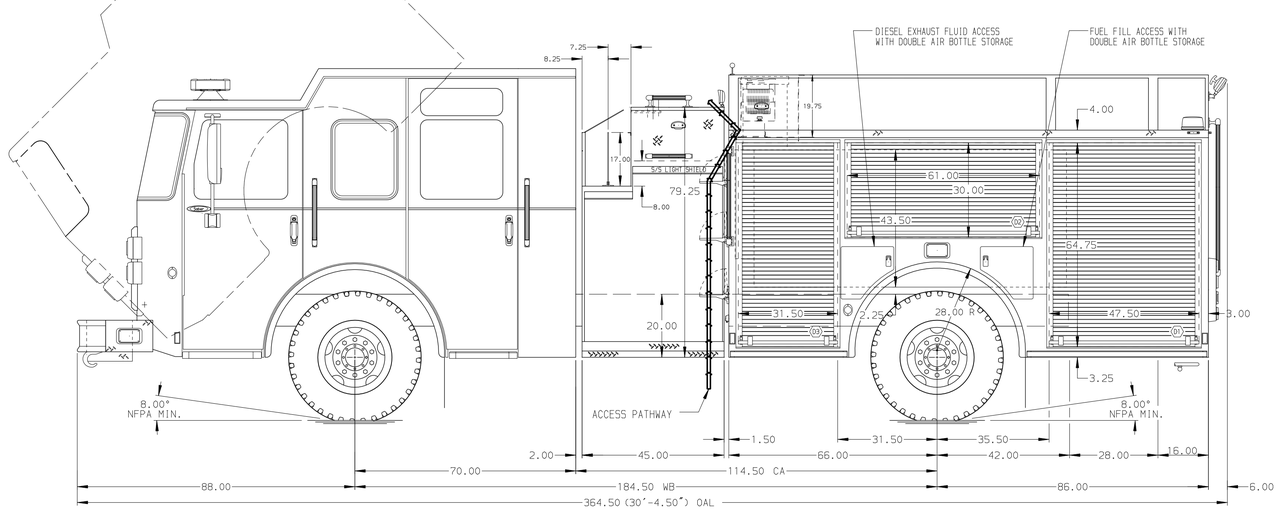

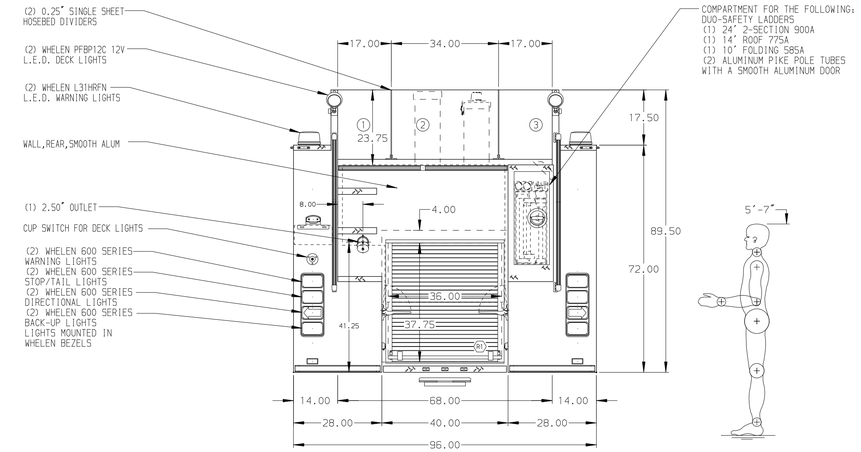

ALUMINUM BODY

NOTE

DIMENSIONS SHOWN ARE APPROXIMATE AND ARE SUBJECT TO MINOR DEVIATIONS AS MAY OCCUR OR BE NECESSARY IN CONSTRUCTION.
MINOR DETAILS NOT SHOWN.

REV	DATE	BY	CH
V	17MAR17	CSQ	CCA

CHASSIS DATA — MAKE: PIERCE — MODEL: SABER FR

Pierce MANUFACTURING INC.
BRADENTON, FLORIDA

TITLE: 1500-D-780P,750G WATER W/30G FOAM,152"PUMPER BODY (2)1.5"CROSSLAYS,45"PUMPHOUSE, DELUGE

FOR: PIERCE FIELD UNIT, BRADENTON, FLORIDA

DWG NO.: 31080AD

JOB NO.	31080
SCALE	1:24
DATE	
DRAWN BY	RWI 12JAN17
CHECKED BY	CAG 12JAN17
SHEET SIZE	D
SHEET NO.	1 OF 1

View File Created 17-MAR-2017 10:04:59