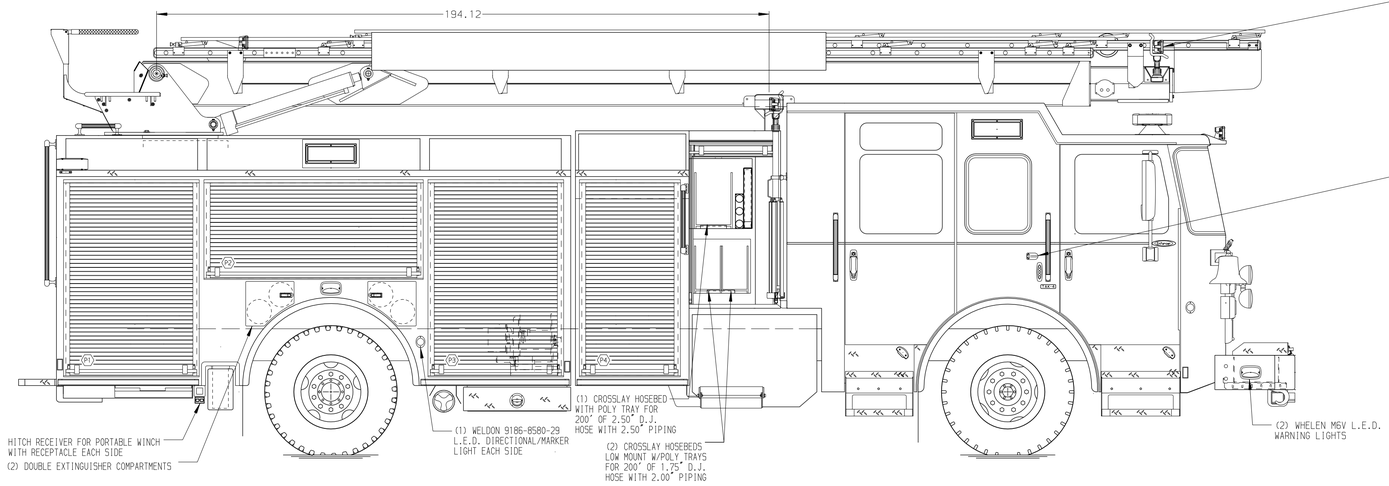

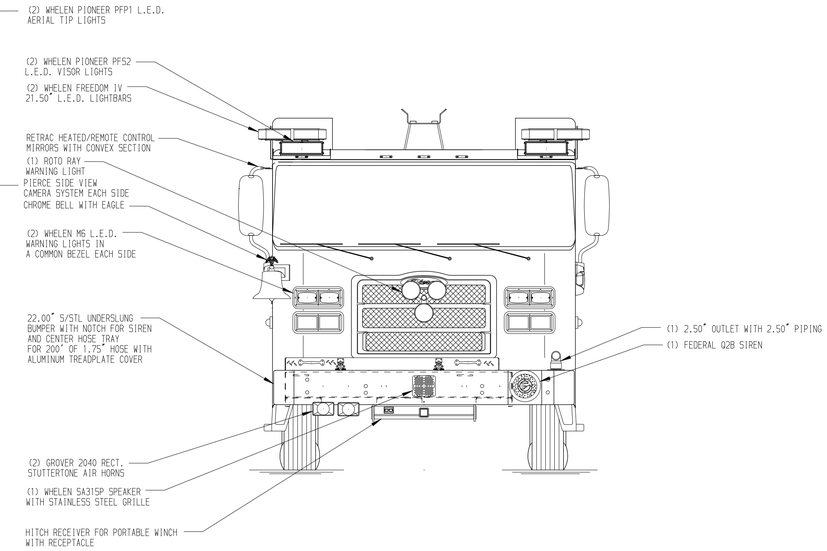

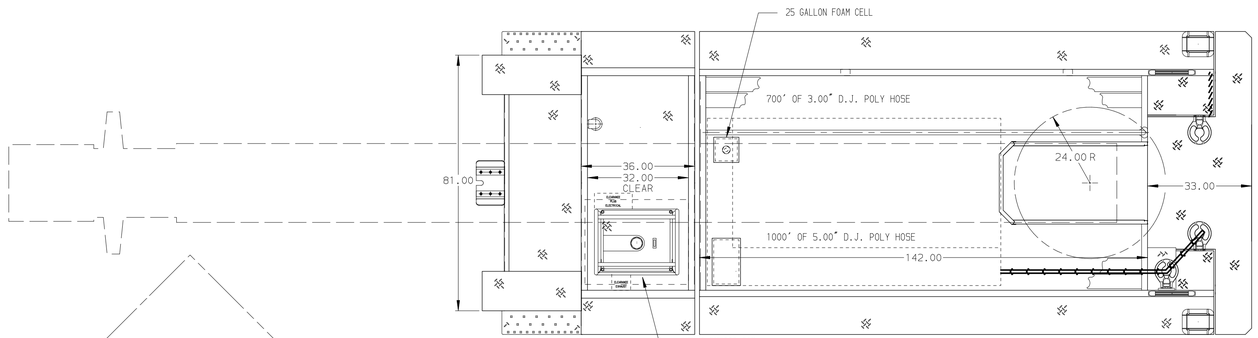

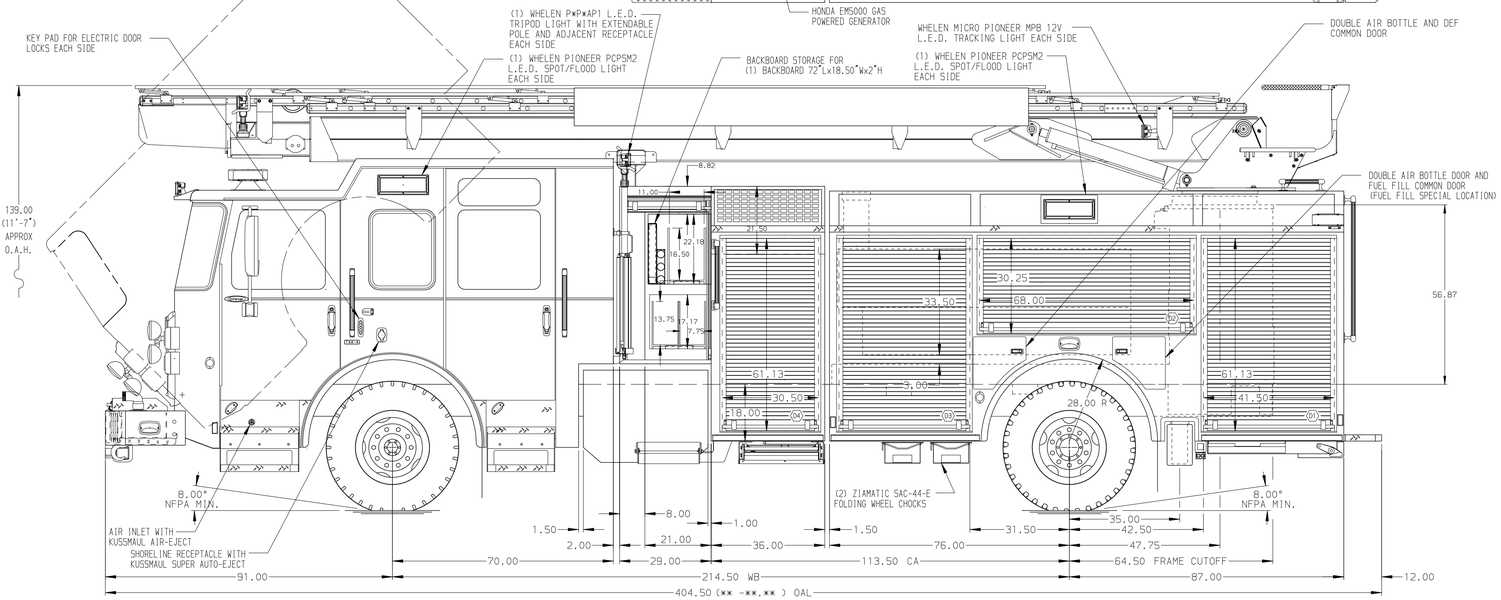

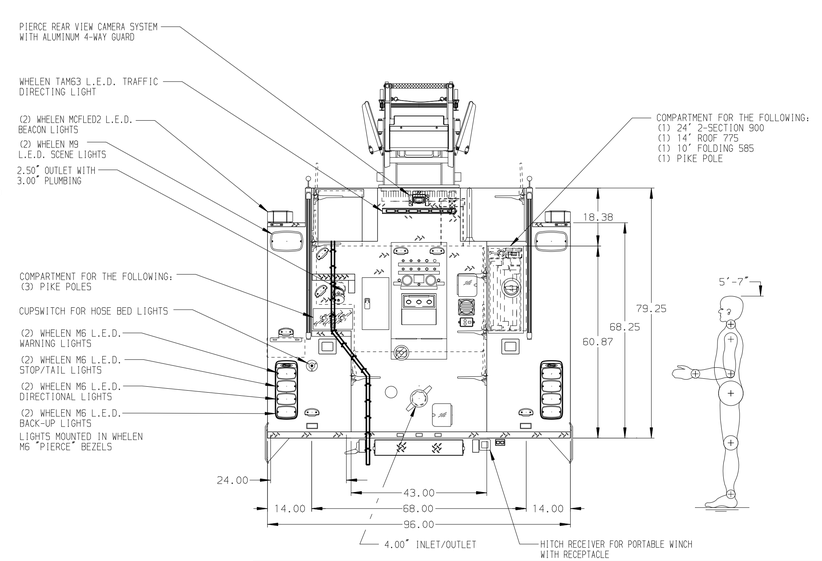

ALUMINUM BODY | MAXIMUM O.A.L. 408" | MAXIMUM O.A.H. 139" | FRONTAL IMPACT & SIDE ROLL PROTECTION

Pierce MANUFACTURING INC.

NOTE

DIMENSIONS SHOWN ARE APPROXIMATE AND ARE SUBJECT TO MINOR DEVIATIONS AS MAY OCCUR OR BE NECESSARY IN CONSTRUCTION.
MINOR DETAILS NOT SHOWN.

1. AIR OUTLET WITH SHUT-OFF VALVE LOCATED AT DRIVER SIDE PUMP PANEL
2. BATTERY CHARGER LOCATED IN COMPARTMENT D3
3. BATTERY CHARGE INDICATOR LOCATED ON DRIVER'S SEAT RISER
4. ONE ADJUSTABLE FULL WIDTH/FULL DEPTH SHELF IN COMPARTMENT P2, TWO EACH IN D1, D3, P1, P4, THREE IN P3
5. ONE FLOOR MOUNTED SLIDE-OUT TRAY IN COMPARTMENTS D1, D3, P1, P4
6. ONE SWING-OUT TOOLBOARD IN COMPARTMENT D2
7. WIRELESS REMOTE CONTROL FOR AERIAL DEVICE
8. 2-WAY INTERCOM SYSTEM BETWEEN AERIAL TIP AND TURNTABLE
9. AERIAL PEDESTAL RAISED 8.00" (56.88)
10. REMOTE MONITOR CONTROLS AT PUMP PANEL
11. CIRCUIT BREAKER PANEL IN COMPARTMENT D3
12. WIRELESS CAMERA SYSTEM AT AERIAL TIP
13. PAC TRACK ON BACK WALL OF COMPARTMENT D3
14. SIX DUPLEX RECEPTACLES IN CAB
15. ONE DUPLEX RECEPTACLES IN COMPARTMENT D1, D3, P1, P2, P3, P4
16. ONE HANNAY 1618-17-18 WITH 200' OF 10/4 CABLE IN COMPARTMENT P3

REV	DATE	BY	CH
V	06SEP17	MWA	JGO
V	04AUG17	MWA	JGO
V	01JUN17	JGA	CRI

CHASSIS DATA	
MAKE	PIERCE
MODEL	ENFORCER
TITLE	55 PIERCE SKYBOOM & BODY ASSEMBLY 525 GALLON TANK, 500 GALLONS WATER, 25 GALLONS FOAM
FOR	BOCA GRANDE BOCA GRANDE, FL
DWG NO.	31090AD

JOB NO.	31090
SCALE	1:24
DATE	
DRAWN BY	JGA
	23MAY17
CHECKED BY	CRI
	24MAY17
SHEET SIZE	D
SHEET NO.	1 OF 1

View File Created 07-SEP-2017 07:00:07