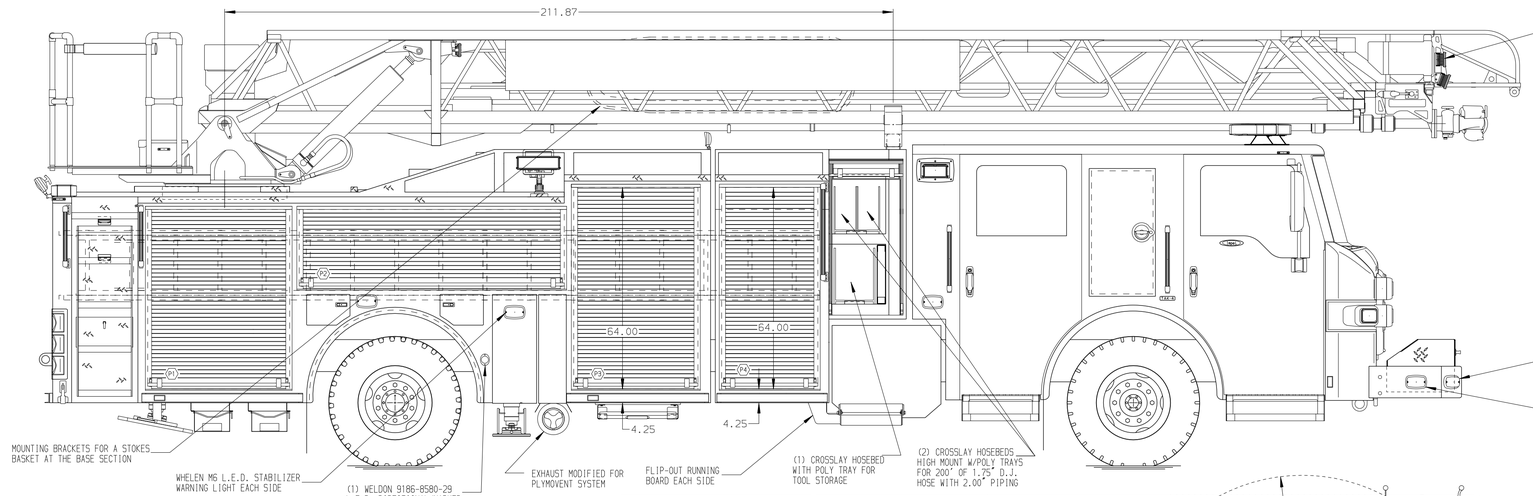

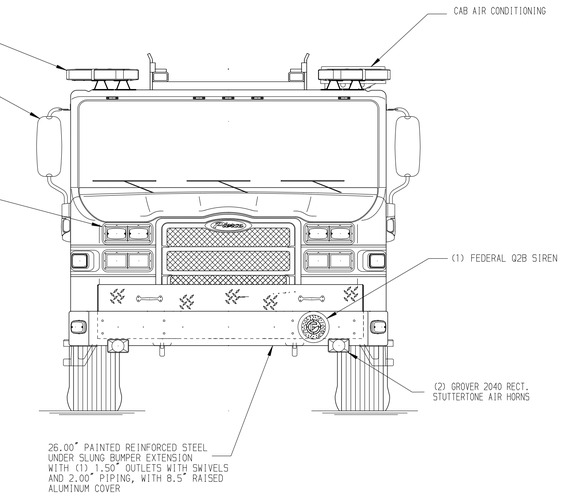

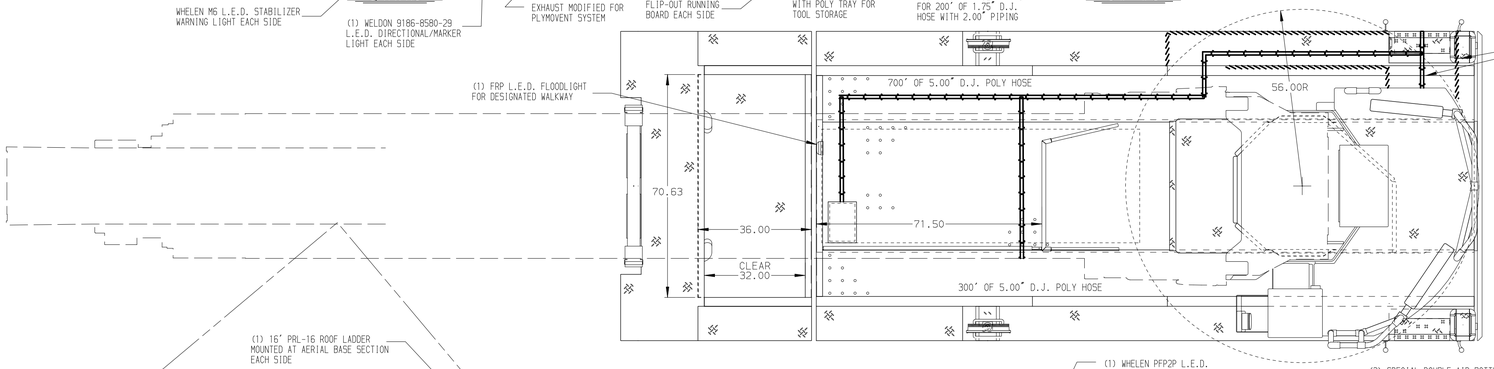

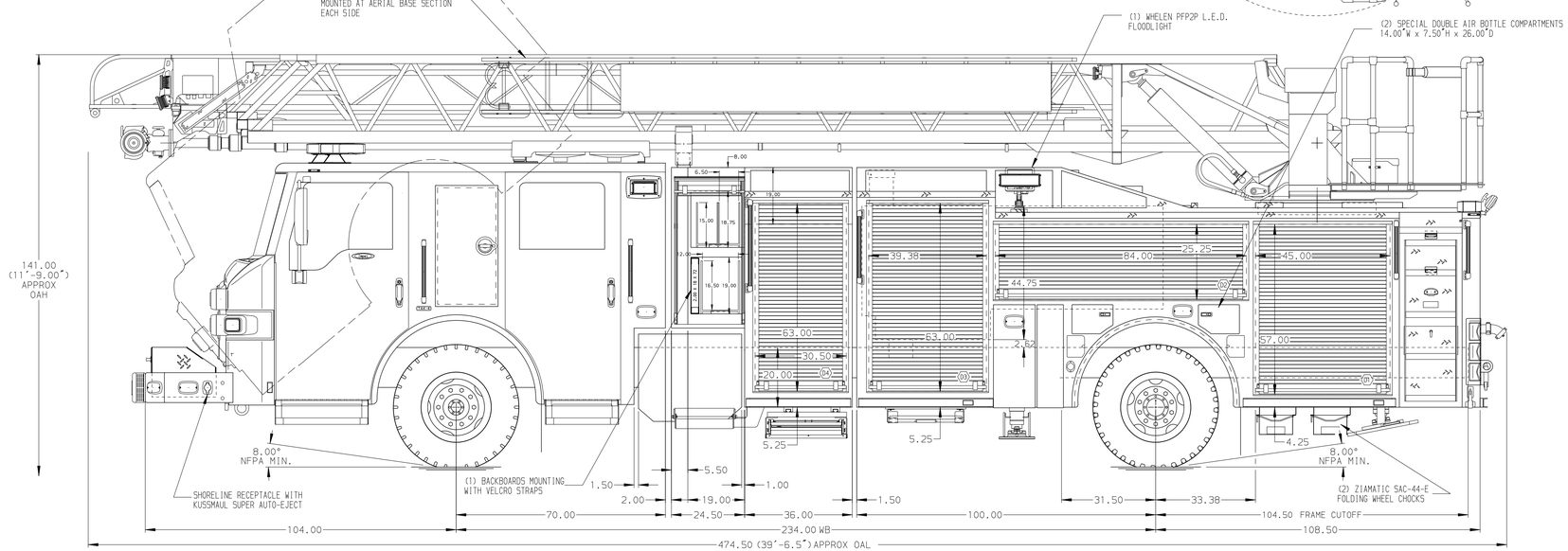

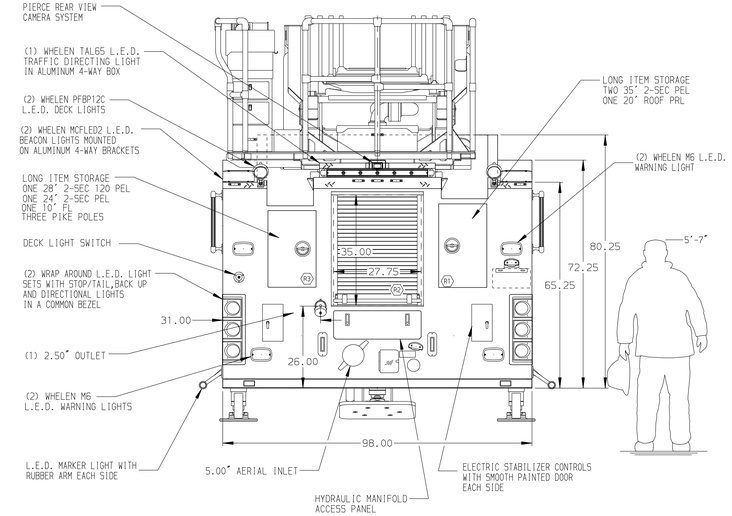

ALUMINUM BODY | SIDE ROLL & FRONTAL IMPACT PROTECTION

NOTE

DIMENSIONS SHOWN ARE APPROXIMATE AND ARE SUBJECT TO MINOR DEVIATIONS AS MAY OCCUR OR BE NECESSARY IN CONSTRUCTION.
MINOR DETAILS NOT SHOWN.

1. BATTERY CHARGER LOCATED IN COMPARTMENT D3
2. ONE ADJUSTABLE FULL WIDTH/FULL DEPTH SHELF IN COMPARTMENTS D1,D2,D3,P1,P3,P4
3. ONE FLOOR MOUNTED SLIDE-OUT TRAY IN COMPARTMENTS D1,P1,D3,P3,P4
4. SWING-OUT TOOL GRID SYSTEM IN COMPARTMENT P2
5. TRIDENT FOLDING STEPS ON AERIAL DEVICE
6. L.E.D. LIGHTING ON AERIAL LADDER SECTIONS
7. ALUMINUM PEGBOARD WITH TRACKS ON THE REAR WALL OF COMPARTMENT P2
8. FIRE RESEARCH 3-WAY INTERCOM SYSTEM BETWEEN AERIAL TIP,PUMP PANEL & TURNTABLE
9. LIFTING EYE ASSEMBLY AT AERIAL TIP
10. 1500 GPM HIGH FLOW WATERWAY
11. AIR INLET WITH DISCONNECT COUPLING IN THE DRIVER SIDE STEPWELL
17. BATTERY CHARGER INDICATOR ON DRIVER'S SEAT WITH BRACKET
13. RECEPTACLE, 20A 120V WATERPROOF LOCATED PERSHOP ORDER

REV	DATE	BY	CH
3	160CT17	LWE	PJP
2	07SEP17	LWE	PJP
1	25JULY	LWE	GRM

CHASSIS DATA
MAKE: PIERCE
MODEL: IMPEL

Pierce MANUFACTURING INC.

TITLE: 107' ASCENDANT ASL AERIAL LADDER AND BODY ASSEMBLY 500 GALLON WATER TANK
FOR: NORTH AURORA FIRE DEPARTMENT, NORTH AURORA, IL
DWG NO.: 31193AD

JOB NO.	31193
SCALE	1:24
DATE	
DRAWN BY	LWE
	13JULY17
CHECKED BY	GRM
	17JUL17
SHEET SIZE	D
SHEET NO.	1 OF 1

View File Created 19-OCT-2017 09:24:07