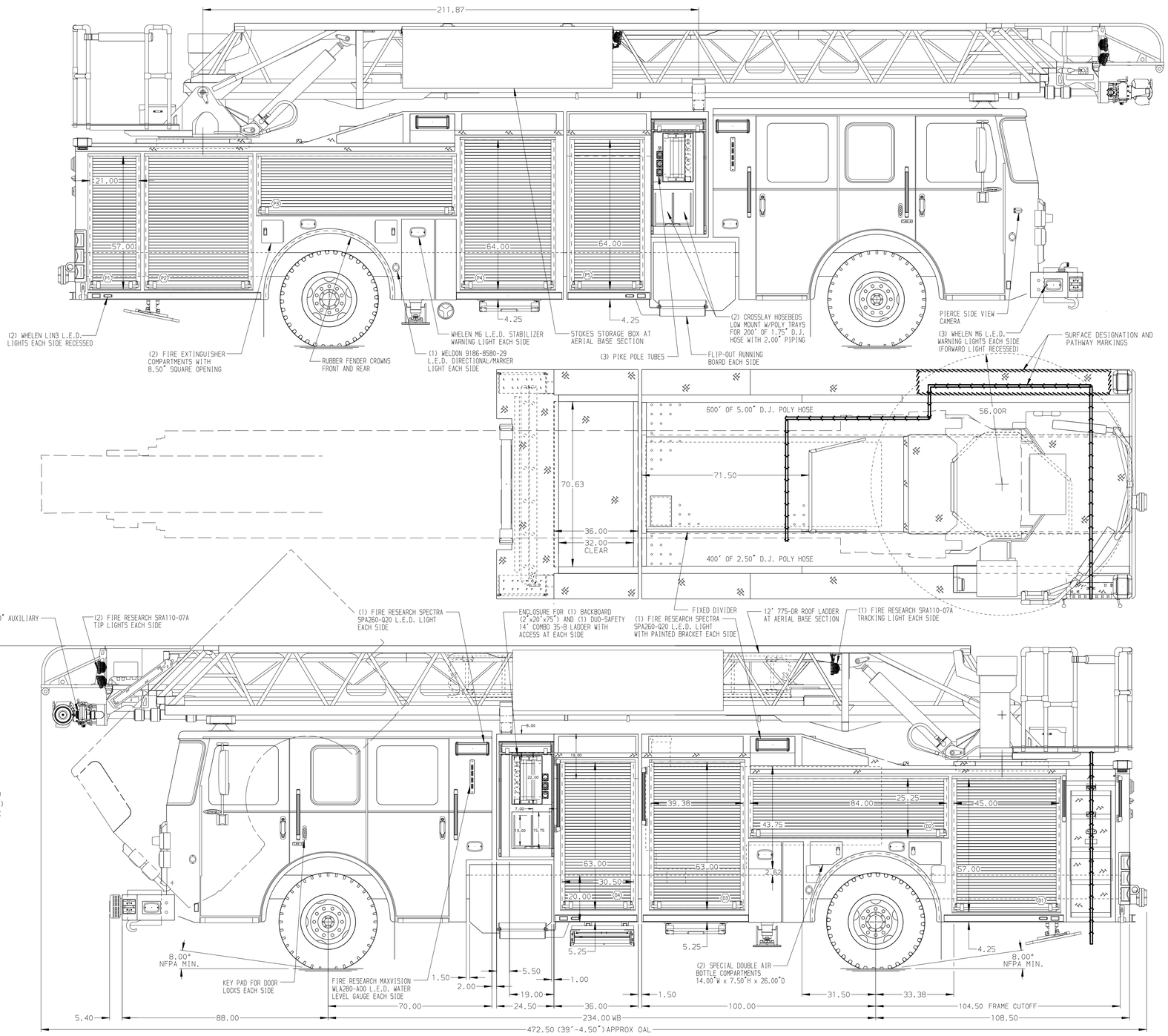

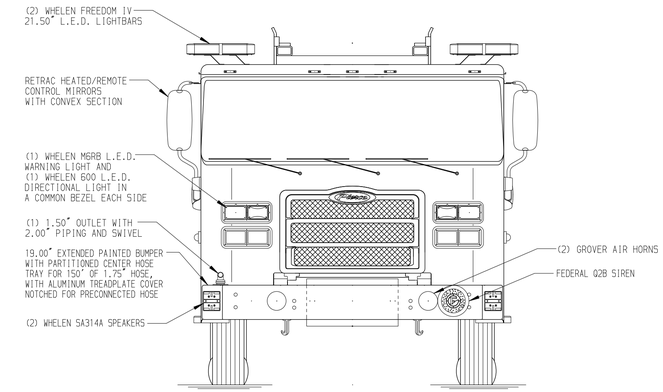

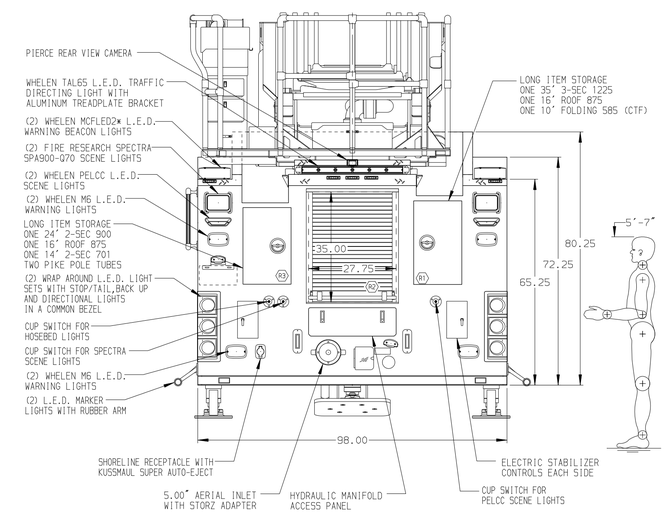

ALUMINUM BODY

NOTE

DIMENSIONS SHOWN ARE APPROXIMATE AND ARE SUBJECT TO MINOR DEVIATIONS AS MAY OCCUR OR BE NECESSARY IN CONSTRUCTION.
MINOR DETAILS NOT SHOWN.

1. ONSPOT AUTOMATIC TIRE CHAINS TO BE PROVIDED AT REAR
2. AIR INLET/OUTLET LOCATED AT DRIVER SIDE PUMP PANEL
3. BATTERY CHARGER LOCATED IN COMPARTMENT P5
4. DUAL L.E.D. LIGHT STRIPS LOCATED IN HOSE BED
5. ONE ADJUSTABLE FULL WIDTH/DEPTH SHELF IN D1,P1,TWO IN D3,P2,P4;THREE IN P5
6. ONE FLOOR MOUNTED SLIDE-OUT TRAY IN COMPARTMENTS D1,D3,P4
7. ONE SWING-OUT ALUMINUM TOOL BOARD IN COMPARTMENTS D2,P3
8. TRIDENT FOLDING STEPS ON AERIAL DEVICE
9. L.E.D. LIGHTING ON AERIAL LADDER SECTIONS
10. 2-WAY INTERCOM SYSTEM BETWEEN AERIAL TIP AND TURNTABLE
11. LIFTING EYE ROPE RESCUE ATTACHMENT AT AERIAL TIP
12. 1500 GPM HIGH FLOW WATERWAY
13. REMOTE MONITOR CONTROLS AT PUMP PANEL
14. ONE VERTICAL DIVIDER IN COMPARTMENTS D2,P3
15. POLY MOUNTING BOARD ON THE BACK WALL OF COMPARTMENTS D2,P3
16. BATTERY CHARGE INDICATOR LOCATED ON DRIVER'S SEAT RISER

REV	DATE	BY	CH
1	11OCT17	SHU	CHR
2	20SEP17	SHU	CHR
3	16JUN17	SHU	GRM

CHASSIS DATA
MAKE: PIERCE
MODEL: ENFORCER

Pierce MANUFACTURING INC.

TITLE: 107' ASCENDANT AERIAL LADDER AND BODY ASSEMBLY
500 GALLON WATER TANK

FOR: WICHITA FALLS FIRE DEPARTMENT
WICHITA FALLS, TX

DWG NO.: 31222AD

JOB NO.	31222
SCALE	1:24
DATE	
DRAWN BY	SHU
12JUN17	
CHECKED BY	GRM
13JUN17	
SHEET SIZE	D
SHEET NO.	1 OF 1

View File Created 12-OCT-2017 10:26:25