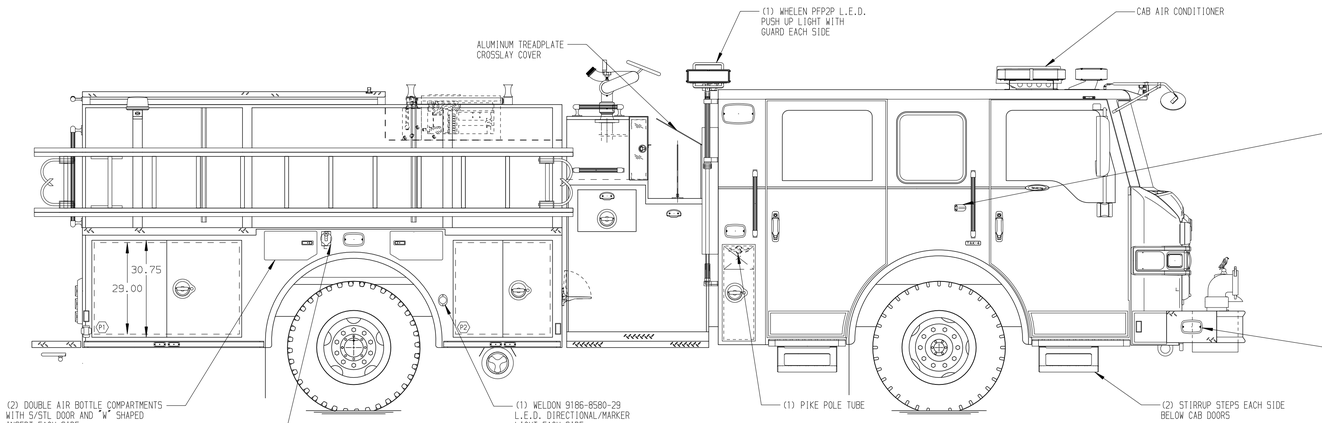

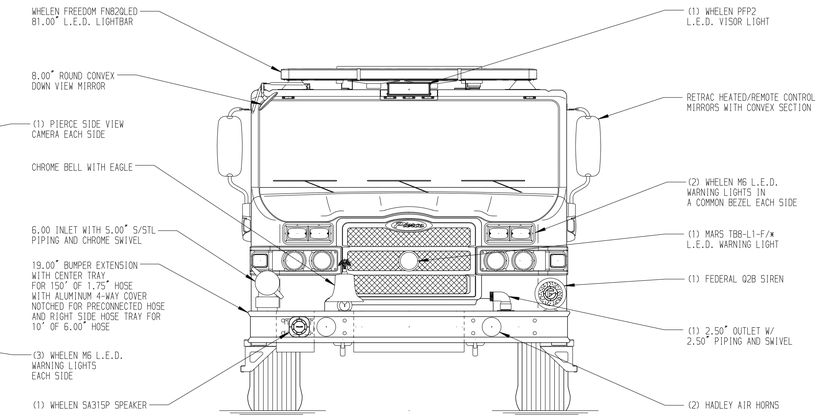

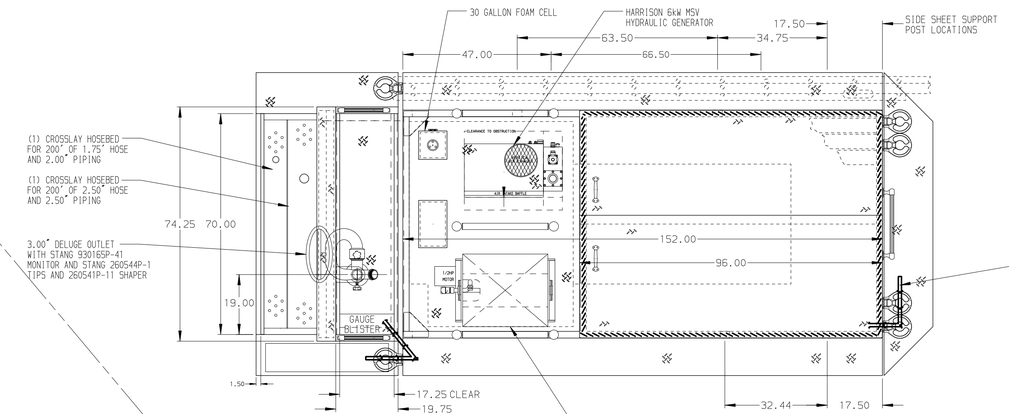

HOSEBED CAPACITIES
1. 250' OF 2.50" D.J. POLY HOSE
2. 1000' OF 4.00" D.J. POLY HOSE
3. 300' OF 3.00" D.J. POLY HOSE
4. 300' OF 2.50" D.J. POLY HOSE

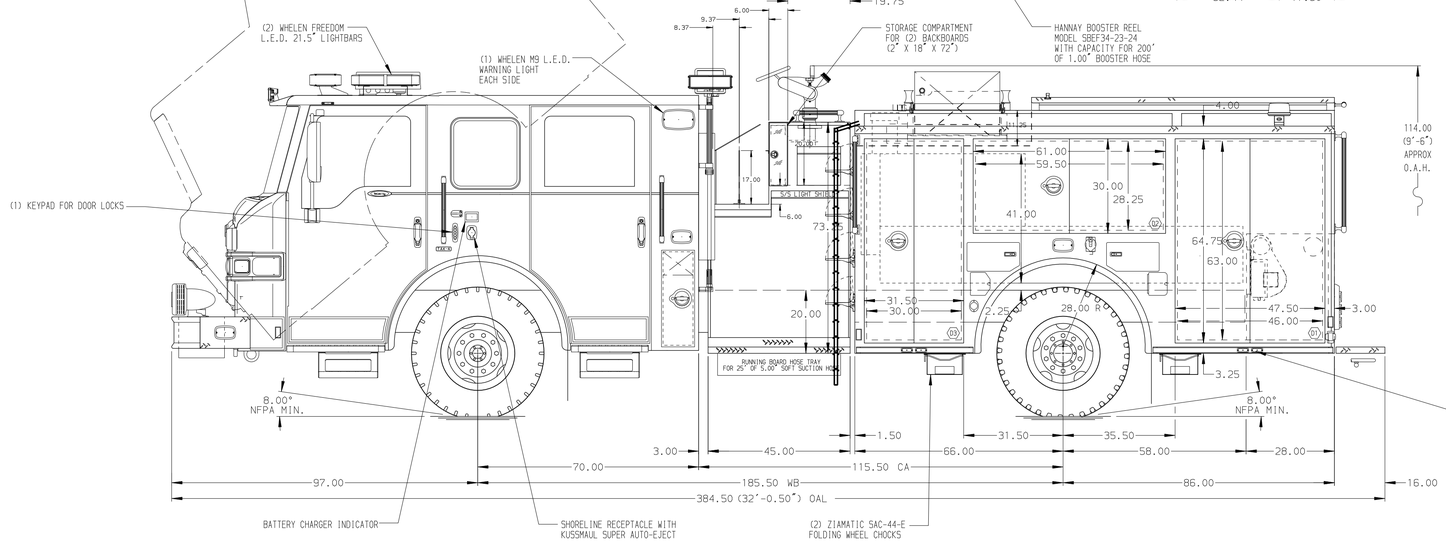

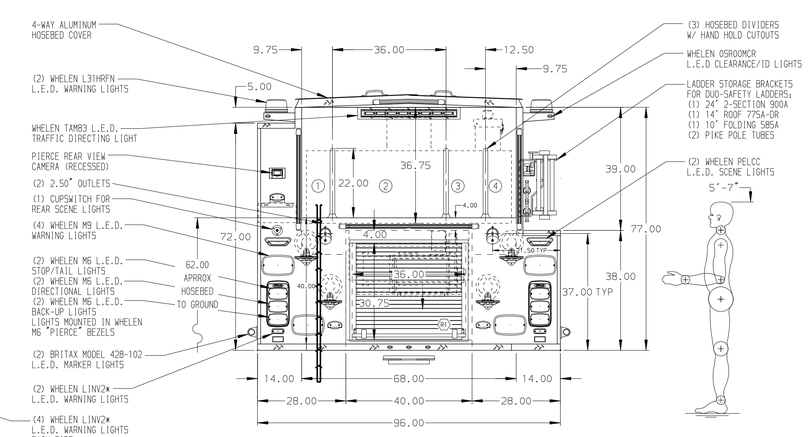

ALUMINUM BODY

SIDE ROLL AND FRONTAL IMPACT PROTECTION

NOTE

DIMENSIONS SHOWN ARE APPROXIMATE AND ARE SUBJECT TO MINOR DEVIATIONS AS MAY OCCUR OR BE NECESSARY IN CONSTRUCTION.
MINOR DETAILS NOT SHOWN.

1. RUD AUTOMATIC TIRE CHAINS TO BE PROVIDED AT REAR
2. VOGEL LUBE SYSTEM PUMP LOCATED PER SHOP ORDER
3. POSITIVE DOOR HOLDER LOCATED ON EACH BODY COMPARTMENT DOOR
4. BATTERY CHARGER LOCATED BEHIND DRIVER'S SEAT
5. TWO AMDOR DUAL L.E.D. STRIP LIGHTS LOCATED BELOW HOSEBED COVER
6. AIR INLET W/ DISCONNECT FITTING LOCATED ON DS PUMP PANEL
7. AIR OUTLET W/ SHUT OFF VALVE LOCATED ON DS PUMP PANEL
8. ONE ADJUSTABLE SLIDE-OUT TRAY IN COMPARTMENTS D1 & P1
9. PARTITION BETWEEN COMPARTMENTS D1/R1 AND P1/R1
10. CIRCUIT BREAKER PANEL IN COMPARTMENT D3
11. ONE 120V DUPLEX RECEPTACLE LOCATED IN COMPARTMENTS P1 & R1
12. ONE AKRON CABLE REEL MODEL ERWC-10-16 LOCATED IN COMPARTMENT R1 WITH CAPACITY FOR 100' OF 10/3 CABLE

REV	DATE	BY	CH
3	21AUG17	AMI	GHO
2	04AUG17	AMI	GHO
1	24MAY17	MMF	CDU

CHASSIS DATA
MAKE: PIERCE
MODEL: VELOCITY

Pierce MANUFACTURING INC.

TITLE: 2000-D-520 GAL POLY W/30 GAL FOAM CELL, 152" BODY (2)CROSSLAYS, DELUGE, BOOSTER REEL, GENERATOR

FOR: OLATHE FIRE DEPARTMENT
OLATHE, KANSAS

DWG NO. 31254AD

JOB NO.	31254
SCALE	1:24
DATE	
DRAWN BY	MMF 15MAY17
CHECKED BY	CCA 17MAY17
SHEET SIZE	D
SHEET NO.	1 OF 1

View File Created 22-AUG-2017 09:18:22