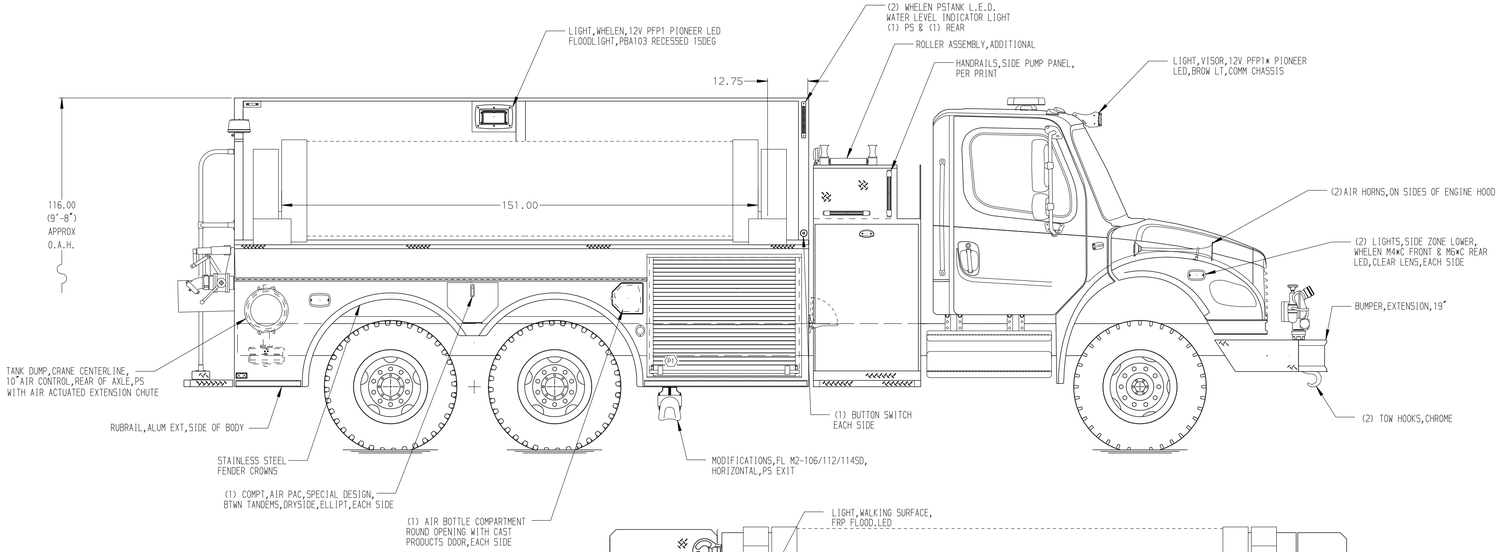


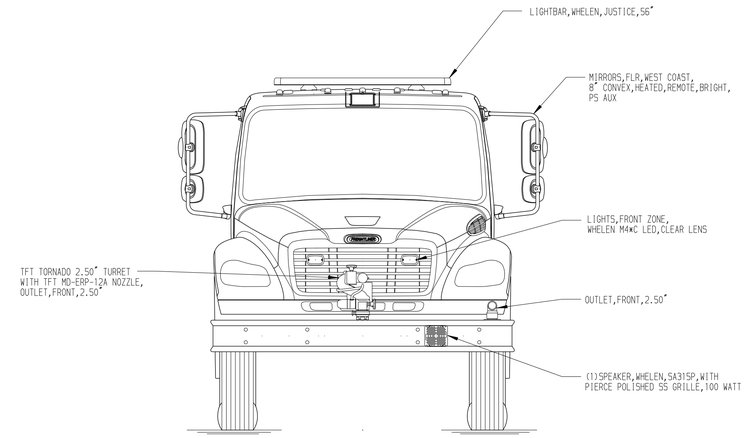


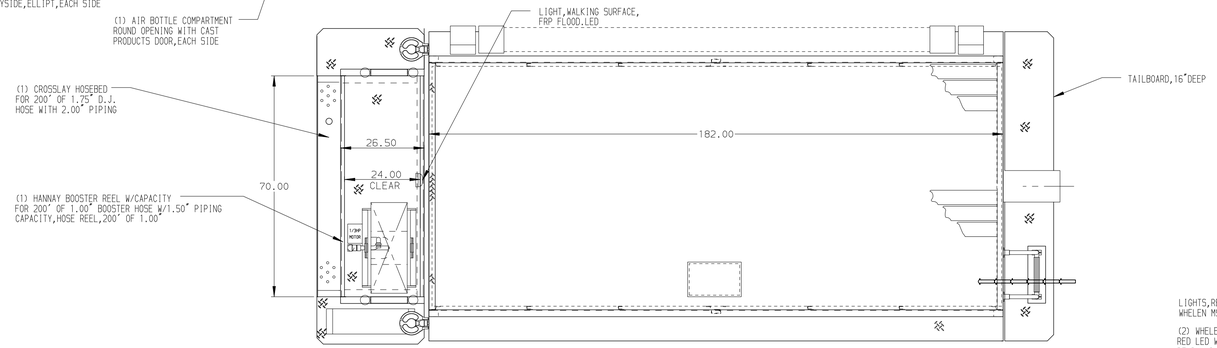


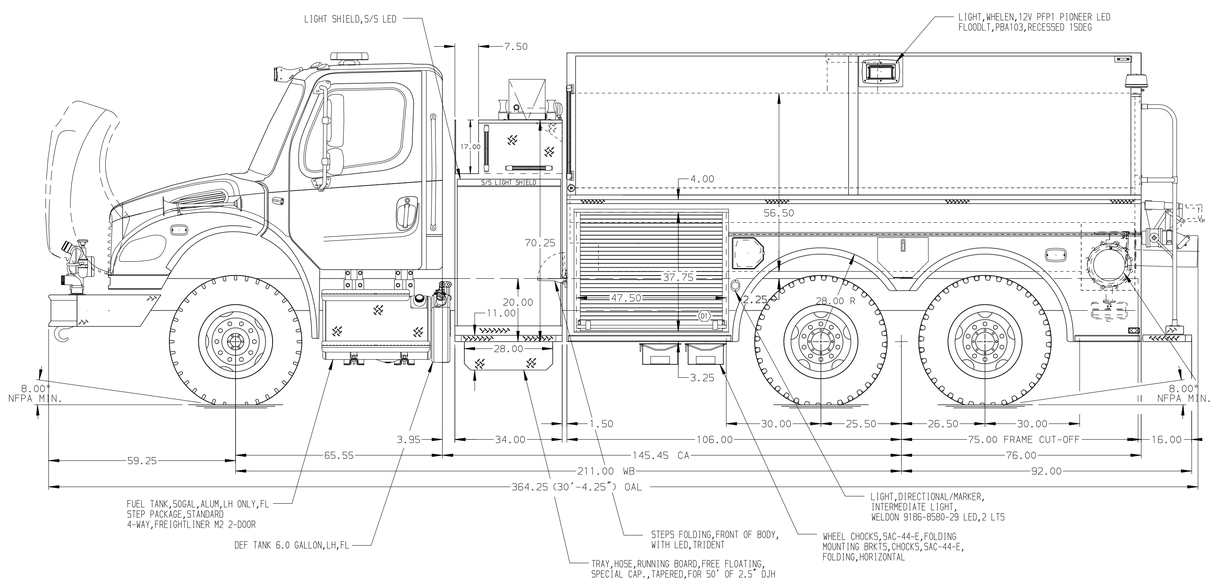


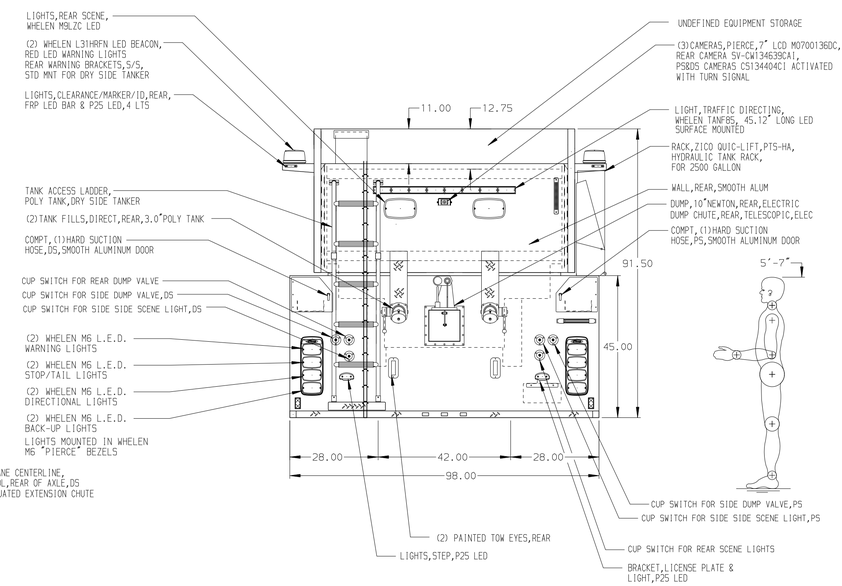


ALUMINUM BODY

NOTE

DIMENSIONS SHOWN ARE APPROXIMATE AND ARE SUBJECT TO MINOR DEVIATIONS AS MAY OCCUR OR BE NECESSARY IN CONSTRUCTION.
MINOR DETAILS NOT SHOWN.

| REV | DATE | BY | CH |
|---|---|---|---|
| D | 16OCT17 | JAF | RWI |
| C | 14SEP17 | JLA | DDR |
| B | 04AUG17 | JLA | DDR |
| A | 12MAY17 | RWI | JAF |

CHASSIS DATA
MAKE: FL
MODEL: M2-106

Pierce MANUFACTURING INC.

TITLE: 500-D-2500 POLY,182"DRYSIDE BODY,W/REAR & SIDE DUMPS 34"SIDE CONTROL,(1)CROSSLAY,REEL,PORTABLE TANK

FOR: OAK CLIFF FIRE PROTECTION DISTRICT EDMOND OKLAHOMA

DWG NO.: 31283AD

| JOB NO. | 31283 |
|---|---|
| SCALE | 1:24 |
| DATE | |
| DRAWN BY | JAF 26APR17 |
| CHECKED BY | RWI 02MAY17 |
| SHEET SIZE | D |
| SHEET NO. | 1 OF 1 |

View File Created 17-OCT-2017 06:40:53