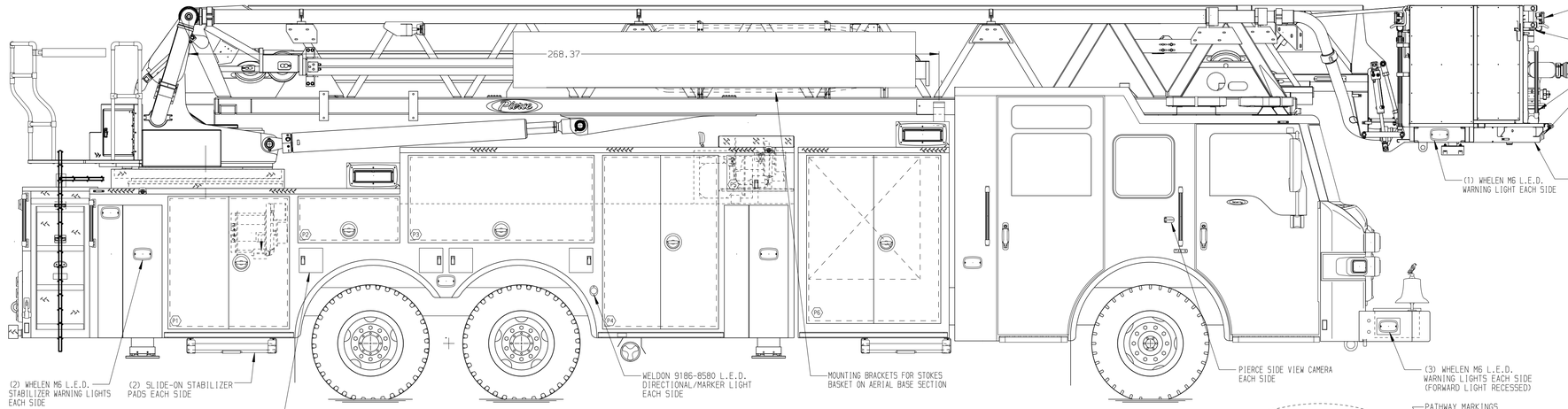

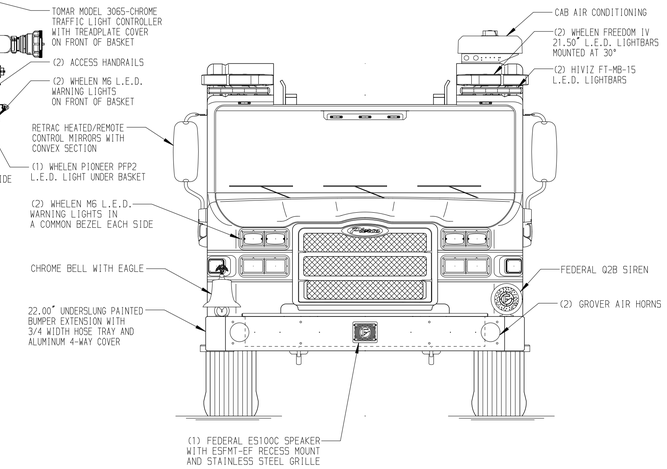

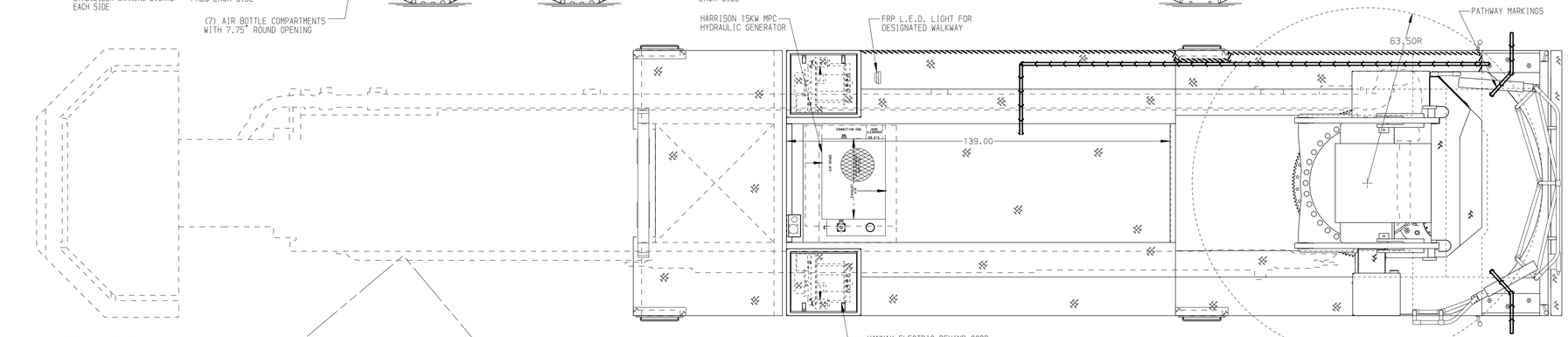

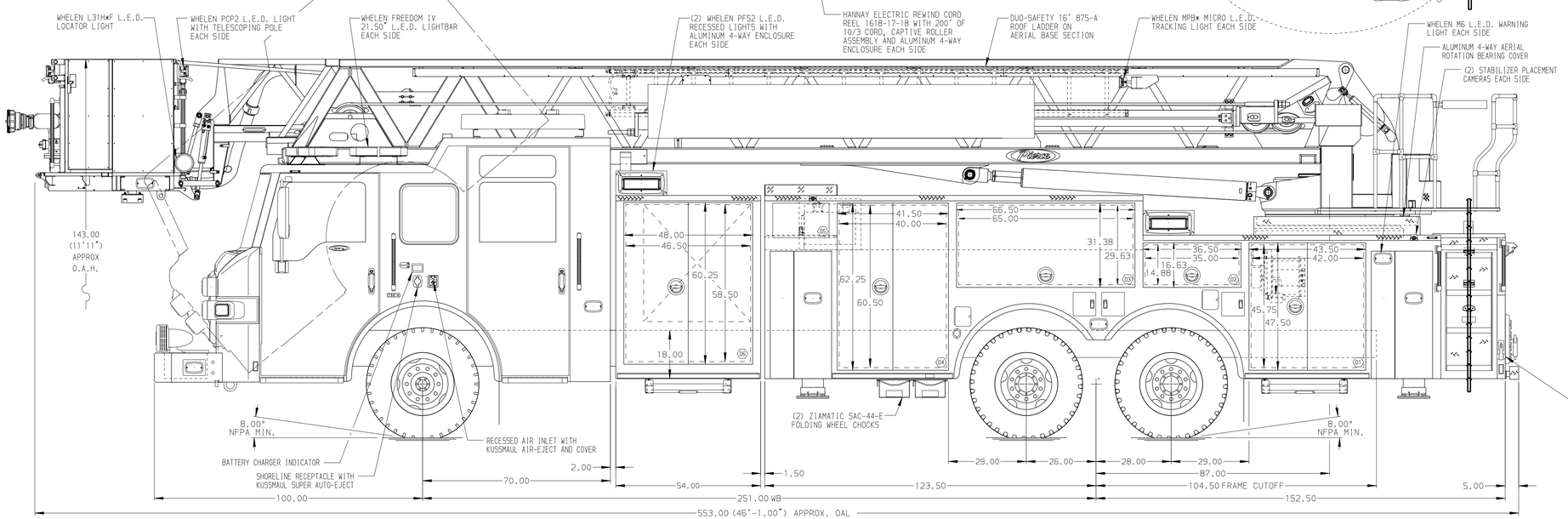

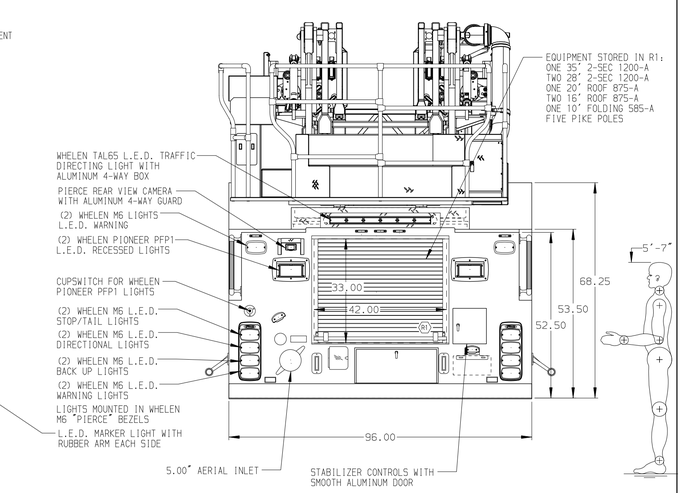

ALUMINUM BODY

MAXIMUM O.A.H. 143.00"

SIDE ROLL AND FRONTAL IMPACT PROTECTION

NOTE

DIMENSIONS SHOWN ARE APPROXIMATE AND ARE SUBJECT TO MINOR DEVIATIONS AS MAY OCCUR OR BE NECESSARY IN CONSTRUCTION.
MINOR DETAILS NOT SHOWN.

1. BATTERY CHARGER LOCATED IN CREW CAB SEAT RISER
2. STAINLESS STEEL SCUFFPLATE ON BODY REAR CORNERS
3. ONE 120V DUPLEX RECEPTACLE LOCATED IN CAB
4. TWO ADJUSTABLE 2-WAY SLIDE-OUT TRAYS WITH 3" SIDES IN COMPARTMENT D6/P6
5. ONE ADJUSTABLE TILTING SLIDE-OUT TRAY IN COMPARTMENTS D3,P3
6. CIRCUIT BREAKER PANEL IN COMPARTMENT D6
7. ONE HANNAY ELECTRIC REWIND CORD REEL MODEL 1618-17-18 WITH 200' OF 10/3 CORD AND CAPTIVE ROLLER ASSEMBLY IN COMPARTMENTS D1,P1
8. L.E.D. LIGHTING ON AERIAL LADDER SECTIONS
9. 120V POWER TO AERIAL TIP
10. 2-WAY INTERCOM SYSTEM BETWEEN AERIAL TIP AND TURNTABLE
11. 3-IN-1 LYFE BRACKETS MOUNTED TO THE FRONT OF THE BASKET

REV	DATE	BY	CH
V	10APR18	SHU	GRM
V	020CT17	SHU	DTS
V	30AUG17	SHU	DTS
V	27JUL17	SHU	GRM

CHASSIS DATA
MAKE: PIERCE
MODEL: VELOCITY

Pierce MANUFACTURING INC.

TITLE: 100 ALUM AERIAL PLATFORM & BODY ASSEMBLY NO TANK/NO PUMP
FOR: CUMBERLAND VALLEY HOSE CO. #2 SHIPPENSBURG, PA
DWG NO. 31298AD

JOB NO.	31298
SCALE	1:24
DATE	
DRAWN BY	SHU
	17JUL17
CHECKED BY	CRI
	20JUL17
SHEET SIZE	D
SHEET NO.	1 OF 1

View File Created 10-APR-2018 10:55:31