PUMPER

BODY
Long Aluminum 2nd Gen Pumper

CHASSIS
Enforcer Chassis

CHASSIS

AXLE, FRONT, CUSTOM
20,000 lb Dana Axle

AXLE, REAR
27,000 lb Dana Axle

ENGINE
400 HP Cummins L9 Engine

TRANSMISSION
Allison 5th Gen, 3000 EVS P

BUMPER
22" Extended Stainless Steel

CAB
6010 Enforcer Cab

BODY

WATER TANK
1000 Gallon Poly Water Tank

COMPT, PUMPER, REAR
51.25" FF Rollup Rear Compt

COMPT, PUMPER, DRIVER SIDE
161" Rollup Full Height Front & Rear FDLER

COMPT, PUMPER PASS. SIDE
161" Rollup Full Height Front & Rear FDLER

FIRE SUPPRESSION

PUMPHOUSE
45" Control Zone Top Mount

PUMP
1500 GPM Waterous CSU

CROSSLAYS, 1.50"
1.50" Crosslays Not Required

CROSSLAYS, 2.50"
2.50" Crosslay Not Required

SPEEDLAYS
(2) 1.50" W/Tray Standard Capacity

GENERATOR
Generator Not Required

Foam System
Husky 3 Single Agent Foam System

Foam Cell
30 Gallon Foam Cell, Not Reduced Water

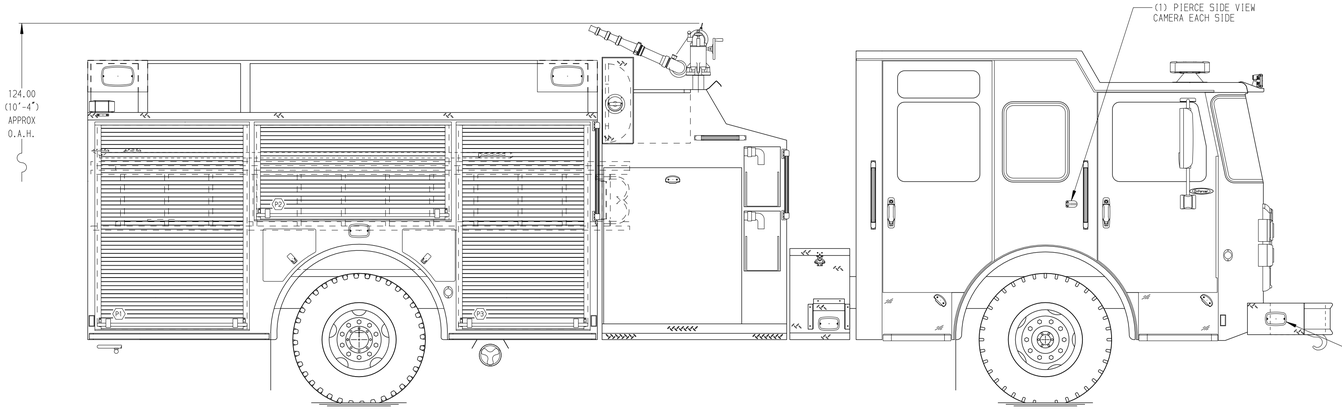

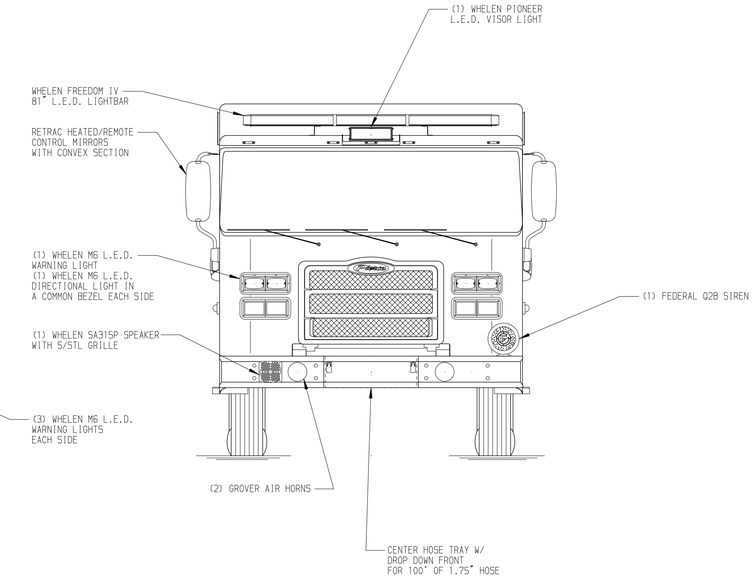

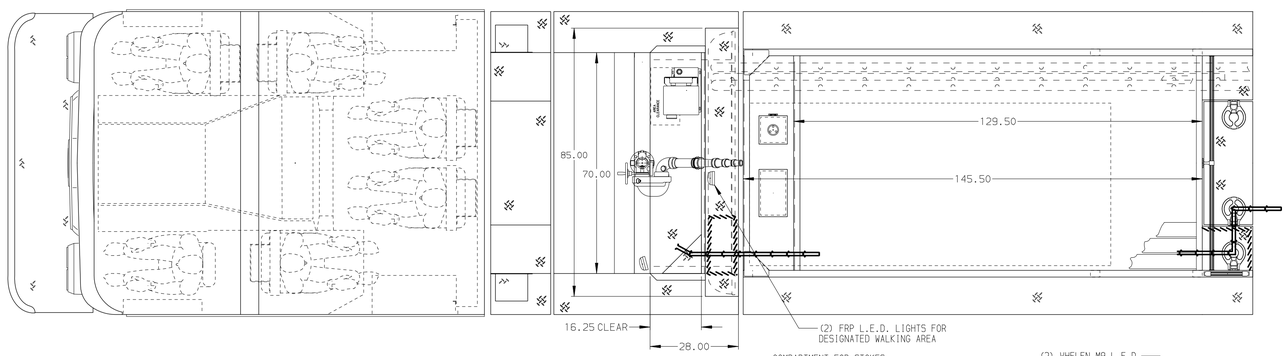

HOSEBED CAPACITY

BED 1
200' OF 2.50" D.J. POLY HOSE

BED 2
1000' OF 5.00" D.J. POLY HOSE

BED 3
100' OF 2.50" D.J. POLY HOSE

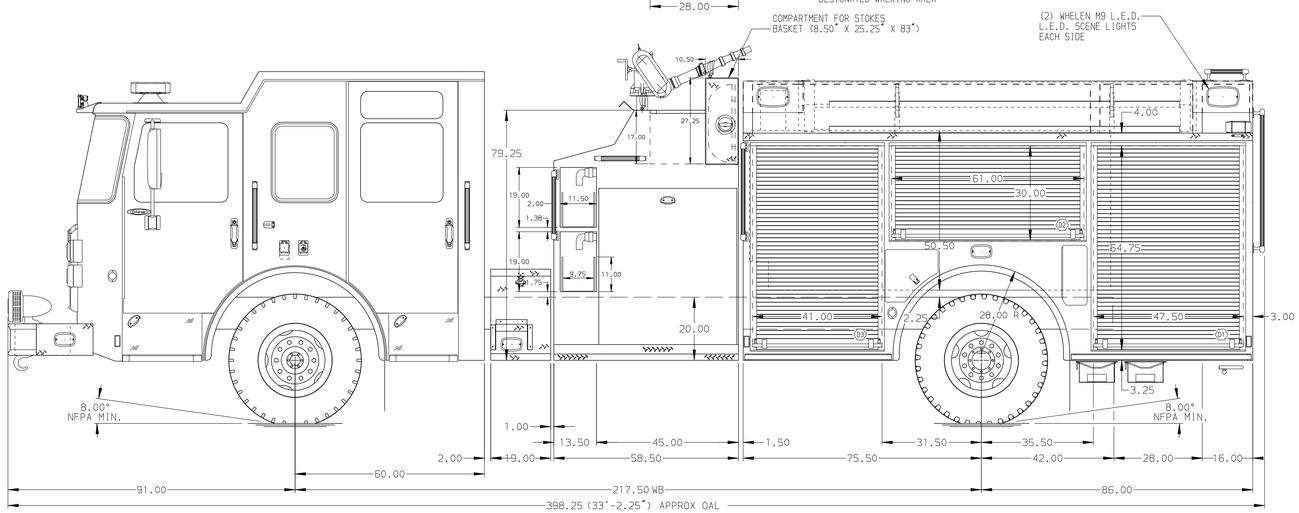

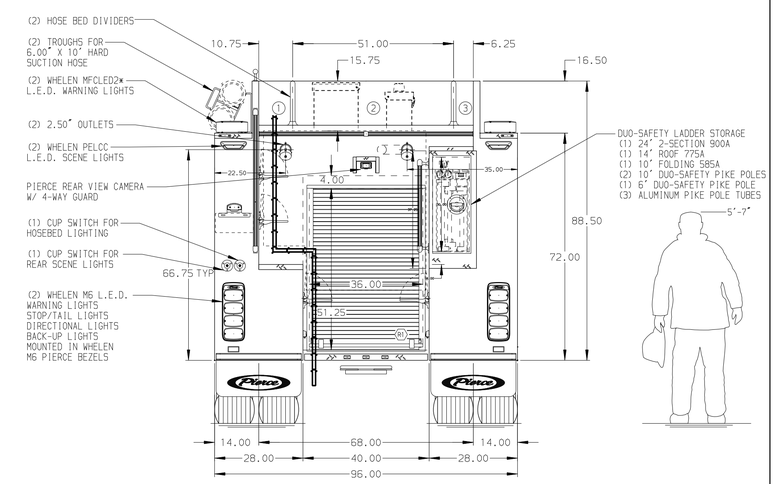

NOTE

DIMENSIONS SHOWN ARE APPROXIMATE AND ARE SUBJECT TO MINOR DEVIATIONS AS MAY OCCUR OR BE NECESSARY IN CONSTRUCTION.
MINOR DETAILS NOT SHOWN.

1. ONE 1.50 OUTLET WITH 2.00 PIPING AND SWIVEL LOCATED IN CENTER BUMPER TRAY
2. SHORELINE RECEPTACLE WITH KUSSMAUL AUTO-EJECT LOCATED ON DRIVER SIDE OF THE CAB
3. AIR INLET WITH KUSSMAUL AUTO EJECT AND WEATHERPROOF COVER LOCATED ON DRIVER SIDE OF THE CAB
4. BATTERY CHARGER LOCATED BEHIND DRIVERS SEAT
5. BATTERY CHARGE INDICATOR LOCATED ON THE DRIVER SIDE SEAT RISER
6. SIX ADJUSTABLE SHELVES LOCATED PER SHOP ORDER
7. THREE FLOOR MOUNTED SLIDE-OUT TRAYS LOCATED PER SHOP ORDER
8. THREE 120V DUPLEX RECEPTACLES LOCATED PER SHOP ORDER

REV	DATE	BY	CH
B	07JUL17	COL	JGO
A	28MAR17	COL	JGO

CHASSIS DATA — MAKE: PIERCE — MODEL: ENFORCER

Pierce MANUFACTURING INC.

JOB NO.	31350		
SCALE	1:24	DATE	
TITLE	Pierce Pumper Approval Drawing -	DRAWN BY	COL 06MAR17
FOR	Carlisle Fire Department -	CHECKED BY	SHE 07MAR17
DWG NO.	31350AD	SHEET SIZE	D
		SHEET NO.	1 OF 1

View File Created 10-JUL-2017 08:22:22