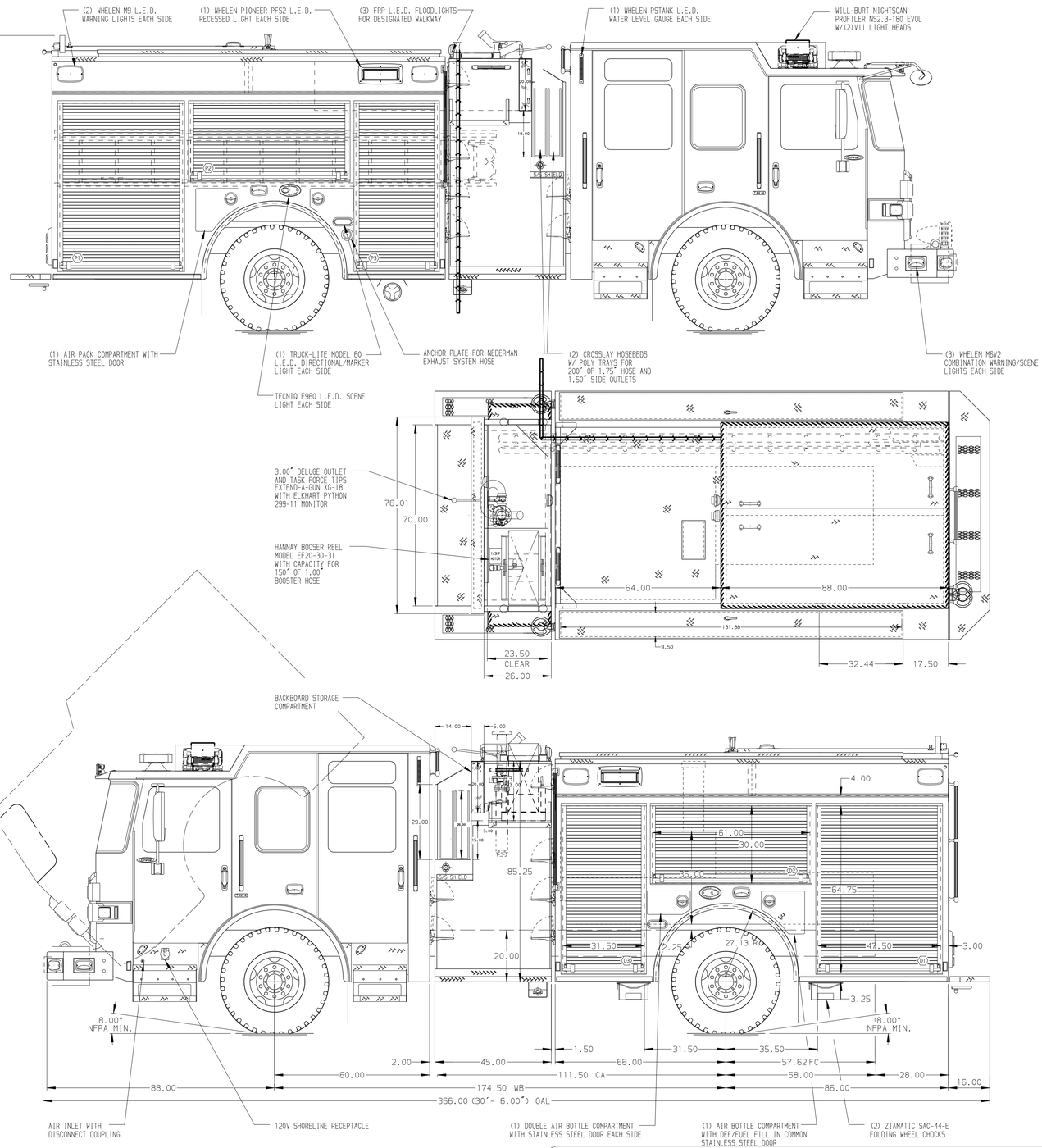

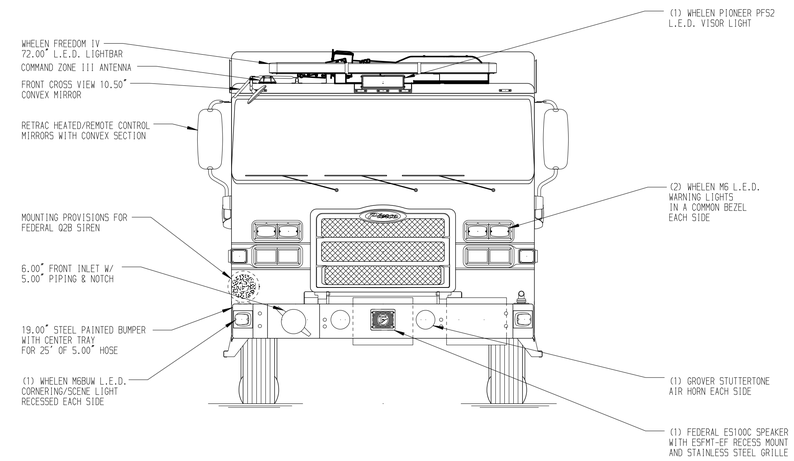

HOSEBED CAPACITIES

1. 800' OF 5.00" SUPPLY HOSE
2. 800' OF 2.50" DJ POLY HOSE

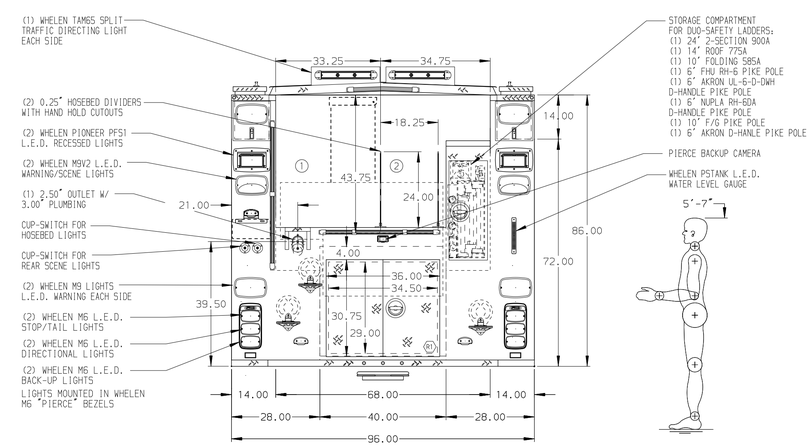

ALUMINUM BODY

SIDE ROLL & FRONTAL IMPACT PROTECTION

NOTE

DIMENSIONS SHOWN ARE APPROXIMATE AND ARE SUBJECT TO MINOR DEVIATIONS AS MAY OCCUR OR BE NECESSARY IN CONSTRUCTION.
MINOR DETAILS NOT SHOWN.

1. RUD AUTOMATIC TIRE CHAINS TO BE PROVIDED AT REAR
2. AIR OUTLET WITH SHUT OFF VALVE LOCATED ON DS PUMP PANEL
3. DUAL L.E.D. LIGHT STRIPS LOCATED IN HOSE BED
4. ONE ADJUSTABLE FULL WIDTH/DEPTH SHELF IN COMPARTMENT D1, D2, P2, TWO IN P1, P3, THREE IN D3
5. ONE ADJUSTABLE SLIDE-OUT TRAY IN COMPARTMENT R1
6. ONE FLOOR MOUNTED SLIDE-OUT TRAY IN COMPARTMENT D3, P3 & R1
7. ZIAMATIC SCBA HOLDER BRACKET SHIPPED LOOSE
8. 4-WAY ALUMINUM ON THE FLOOR OF COMPARTMENT D1, D3, P1, P3 & R1

REV	DATE	BY	CH
V	08NOV17	NPA	MSA
V	040CT17	AMI	MSA
V	15SEP17	AMI	MSA
V	20JUL17	AMI	SMA

CHASSIS DATA: MAKE PIERCE; MODEL ENFORCER

Pierce MANUFACTURING INC.

TITLE: 1500-D-500P GALLON TANK, 152" PUMPER BODY, 45" SC PH (2)XLAYS, DELUGE, LADDERS BETWEEN TANK AND SIDESHEET

FOR: BELLINGHAM FIRE DEPARTMENT, BELLINGHAM, WASHINGTON

DWG NO.: 31376AD

JOB NO.	31376
SCALE	1:24
DATE	
DRAWN BY	AMI
DATE	12JUL17
CHECKED BY	SMA
DATE	12JUL17
SHEET SIZE	D
SHEET NO.	1 OF 1

View File Created 13-NOV-2017 12:59:40