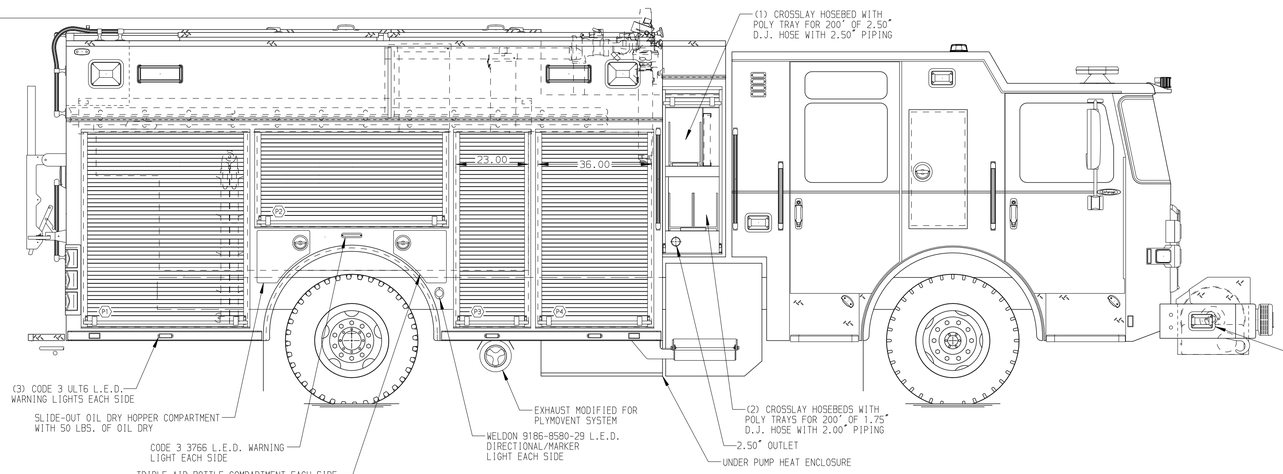

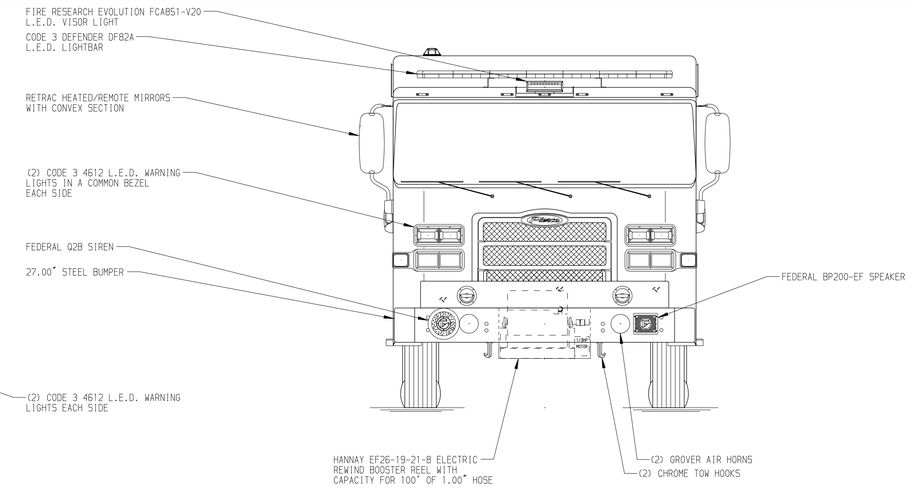

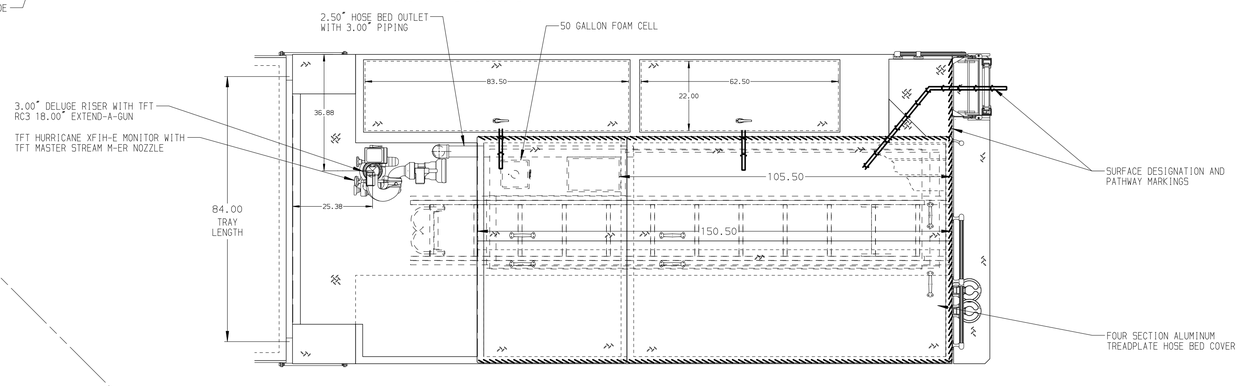

HOSEBED CAPACITIES

1. 800' OF 2.50" D.J. POLY HOSE
2. 800' OF 5.00" D.J. HOSE
3. 200' OF 2.50" D.J. HOSE

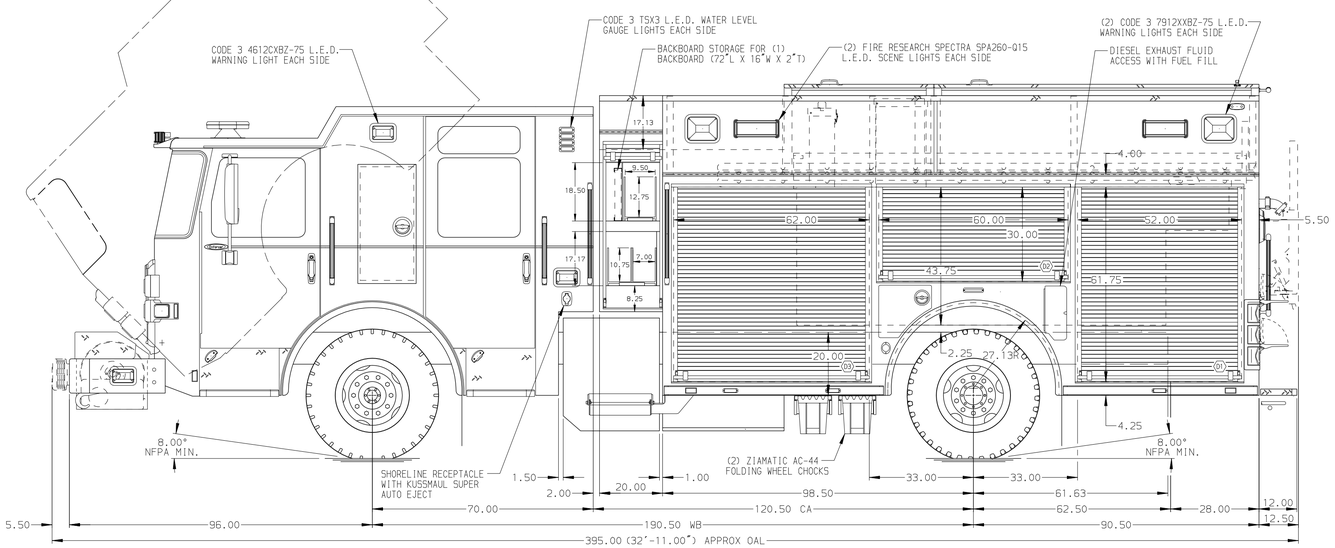

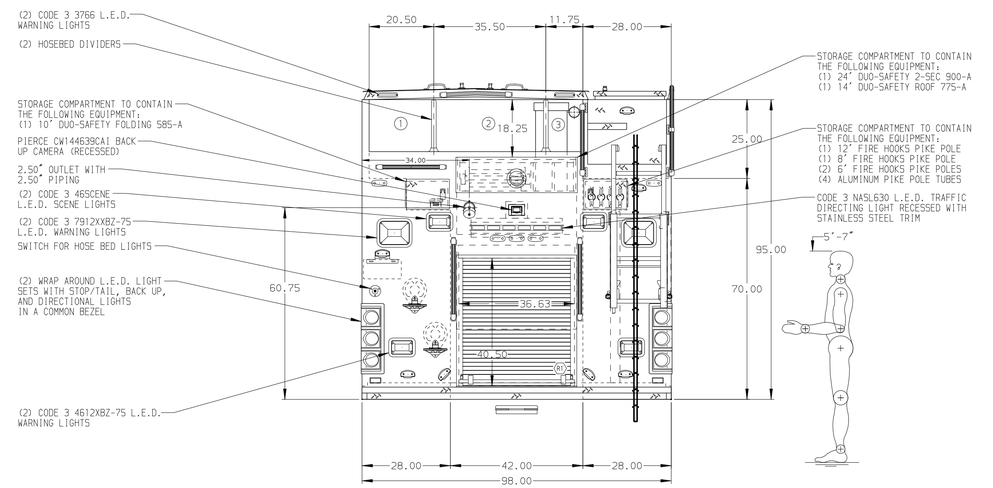

ALUMINUM BODY

NOTE

DIMENSIONS SHOWN ARE APPROXIMATE AND ARE SUBJECT TO MINOR DEVIATIONS AS MAY OCCUR OR BE NECESSARY IN CONSTRUCTION.
MINOR DETAILS NOT SHOWN.

1. ONE MODEL 17 LITTLE GIANT LADDER IN COMPARTMENT-P1
2. HYDRAULIC OIL RESERVOIR FOR HUSKY 12 FOAM SYSTEM LOCATED IN THE FRONT BODY MODULE
3. BATTERY CHARGER LOCATED IN COMPARTMENT-D3
4. BATTERY CHARGER INDICATOR LOCATED ON DRIVER SIDE SEAT RISER
5. AMDOR LUMABAR L.E.D. WALKING SURFACE LIGHTING LOCATED IN THE CARGO AREA
6. PULL STRAPS FOR DOORS IN COMPARTMENT-D2,P2
7. ONE FULL WIDTH/DEPTH ADJUSTABLE SHELF WITH SIDES IN COMPARTMENT-P4;TWO IN D3
8. ONE ADJUSTABLE SLIDE-OUT TRAY WITH SIDES IN COMPARTMENT-D1,P1,P3,R1
9. ONE ADJUSTABLE TILT/SLIDE-OUT TRAY IN COMPARTMENT-D1,P1,P2,P3,P4
10. ONE FLOOR MOUNTED SLIDE-OUT TRAY WITH SIDES IN COMPARTMENT-D1,P1,P2,P3,R1
11. ONE ALUMINUM SWING-OUT TOOLBOARD WITH PAC-TRAC IN COMPARTMENT-D2
12. TWO SLIDE-OUT DRAWERS IN COMPARTMENT-D3
13. ONE ELECTRIC CERAMIC HEATER IN COMPARTMENT-P4
14. PAC TRAC EQUIPMENT MOUNTING SYSTEM ON THE WALLS IN COMPARTMENT-D3
15. ONE VERTICAL BOLT-IN PARTITION BETWEEN COMPARTMENTS D1/R1 AND P1/R1
16. ONE VERTICAL PARTITION IN COMPARTMENT-P1
17. ONE VERTICAL PARTITION MOUNTED ON TRAYS IN COMPARTMENT-D1
18. TWO DUPLEX RECEPTACLES IN COMPARTMENT-D1,P4

REV	DATE	BY	CH
3	040CT17	BST	COR
2	07SEP17	BST	COR
1	14JUL17	COL	CCA

CHASSIS DATA
MAKE: PIERCE
MODEL: ENFORCER

Pierce MANUFACTURING INC.

TITLE: 1500-D-750P W/50 GAL. FOAM CELL,DELUGE,HUSKY 12
189 PUC RESCUE BODY,LADDERS BELOW HOSE BED

FOR: CANTON FIRE DEPARTMENT
CANTON, MI

DWG NO. 31400AD

JOB NO.	31400 01-02
SCALE 1:24	DATE
DRAWN BY BST	27JUN17
CHECKED BY CCA	27JUN17
SHEET SIZE D	SHEET NO. 1 OF 1

View File Created 12-OCT-2017 11:21:08