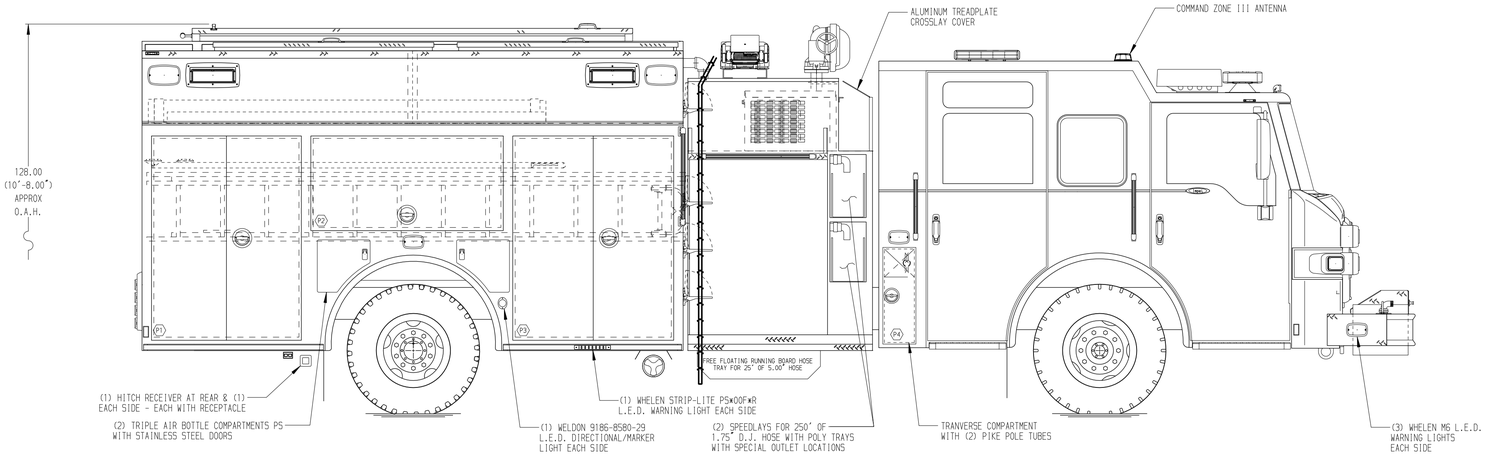

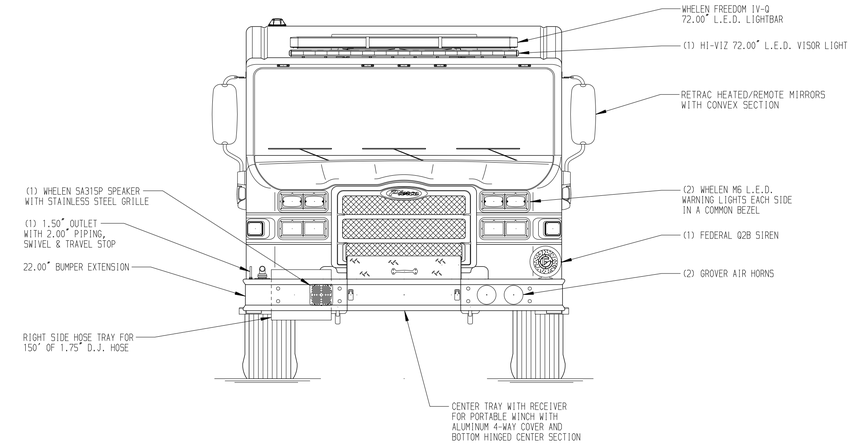

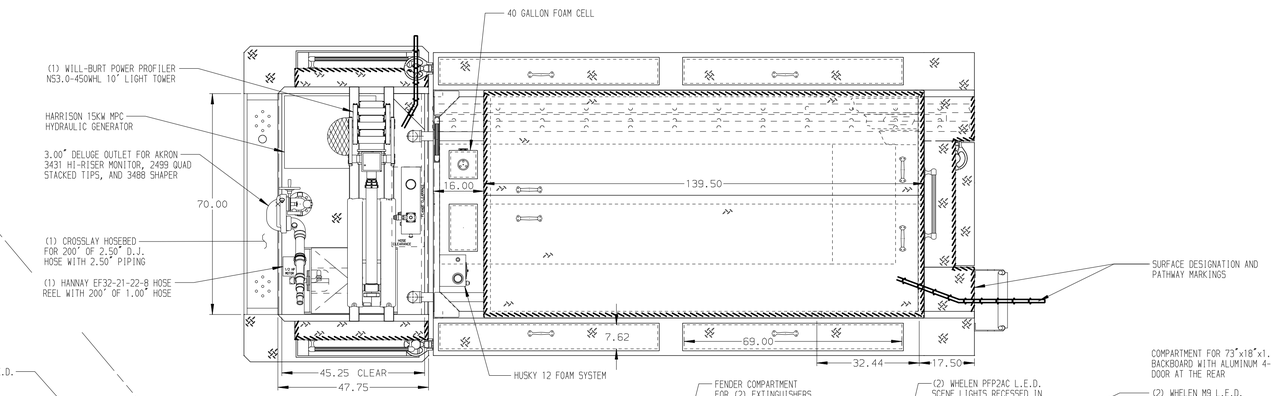

HOSEBED CAPACITIES
1. 500' OF 3.00" D.J. POLY HOSE
2. 1000' OF 5.00" D.J. POLY HOSE
3. 500' OF 3.00" D.J. POLY HOSE

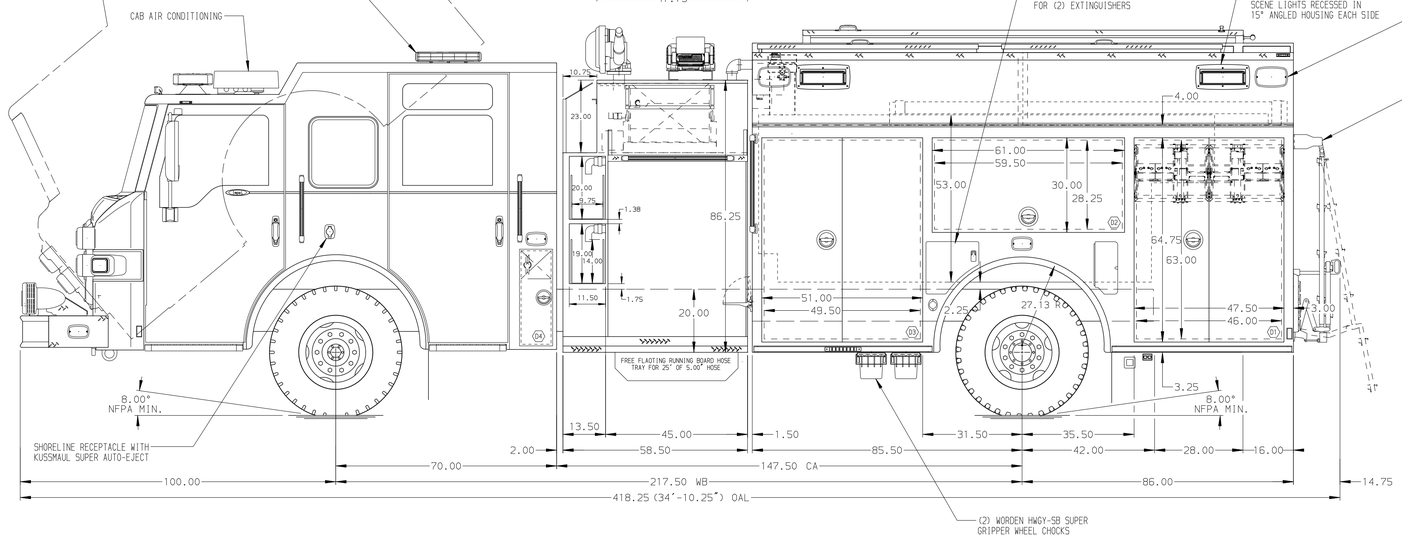

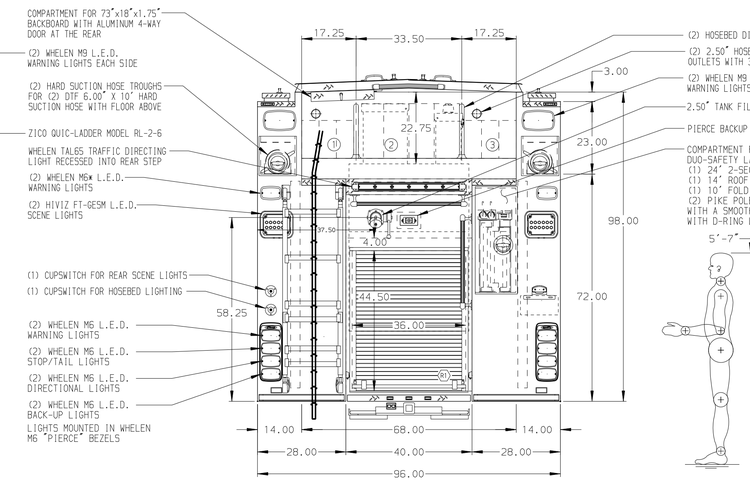

ALUMINUM BODY

MAXIMUM O.A.L. 418.25"

NOTE

DIMENSIONS SHOWN ARE APPROXIMATE AND ARE SUBJECT TO MINOR DEVIATIONS AS MAY OCCUR OR BE NECESSARY IN CONSTRUCTION.
MINOR DETAILS NOT SHOWN.

1. BATTERY CHARGER LOCATED BEHIND DRIVER SEAT
2. BATTERY CHARGE INDICATOR LOCATED NEAR D.S. SEAT RISER WITH BRACKET
3. DUAL L.E.D. LIGHT STRIPS LOCATED IN HOSE BED
4. TWO FIXED FULL WIDTH/DEPTH BRUSHED ALUMINUM SHELVES IN COMPARTMENTS D1, ONE IN D3 & R1
5. ONE FIXED FULL WIDTH/DEPTH PAINTED SHELF IN COMPARTMENT D1, D3, & R1
6. ONE FLOOR MOUNTED SLIDE-OUT TRAY IN COMPARTMENT D1
7. TWO ALUMINUM SWING-OUT TOOLBOARDS WITH PAC TRAC IN COMPARTMENT D2
8. ONE SET OF (2) TOOL DRAWERS IN COMPARTMENT D3
9. PARTITION BETWEEN COMPARTMENTS D1/R1 AND P1/R1
10. ONE VERTICAL PARTITION (SPECIAL HEIGHT) IN COMPARTMENT D3
11. ONE 0.75 FNPT GARDEN HOSE TANK FILL ON DS PUMP PANEL
12. TWO ADDITIONAL POLY TRAYS SHIPPED LOOSE
13. TWO CMW 6021 REELS WITH 200' OF 10/3 CABLE & 100' OF TWIN LINE HYDRAULIC HOSE EACH LOCATED IN COMPARTMENT D1
14. CIRCUIT BREAKER PANEL IN COMPARTMENT D3

REV	DATE	BY	CH
3	13OCT17	GVH	GHO
2	26SEP17	GVH	GHO
1	26JUL17	GVH	GHO

CHASSIS DATA
MAKE: PIERCE
MODEL: IMPEL

Pierce MANUFACTURING INC.

TITLE: 1500-D-96OP W/40G FOAM, 171" FULL HEIGHT & DEPTH BODY (2) SPEEDLAYS, DELUGE, GENERATOR, LIGHT TOWER, REELS

FOR: ROANOKE ISLAND VOLUNTEER FIRE DEPARTMENT MANTEO, NORTH CAROLINA

DWG NO.: 31417AD

JOB NO.	31417
SCALE 1:24	DATE
DRAWN BY GVH	14JUL17
CHECKED BY CDU	14JUL17
SHEET SIZE D	SHEET NO. 1 OF 1

View File Created 16-OCT-2017 07:05:56