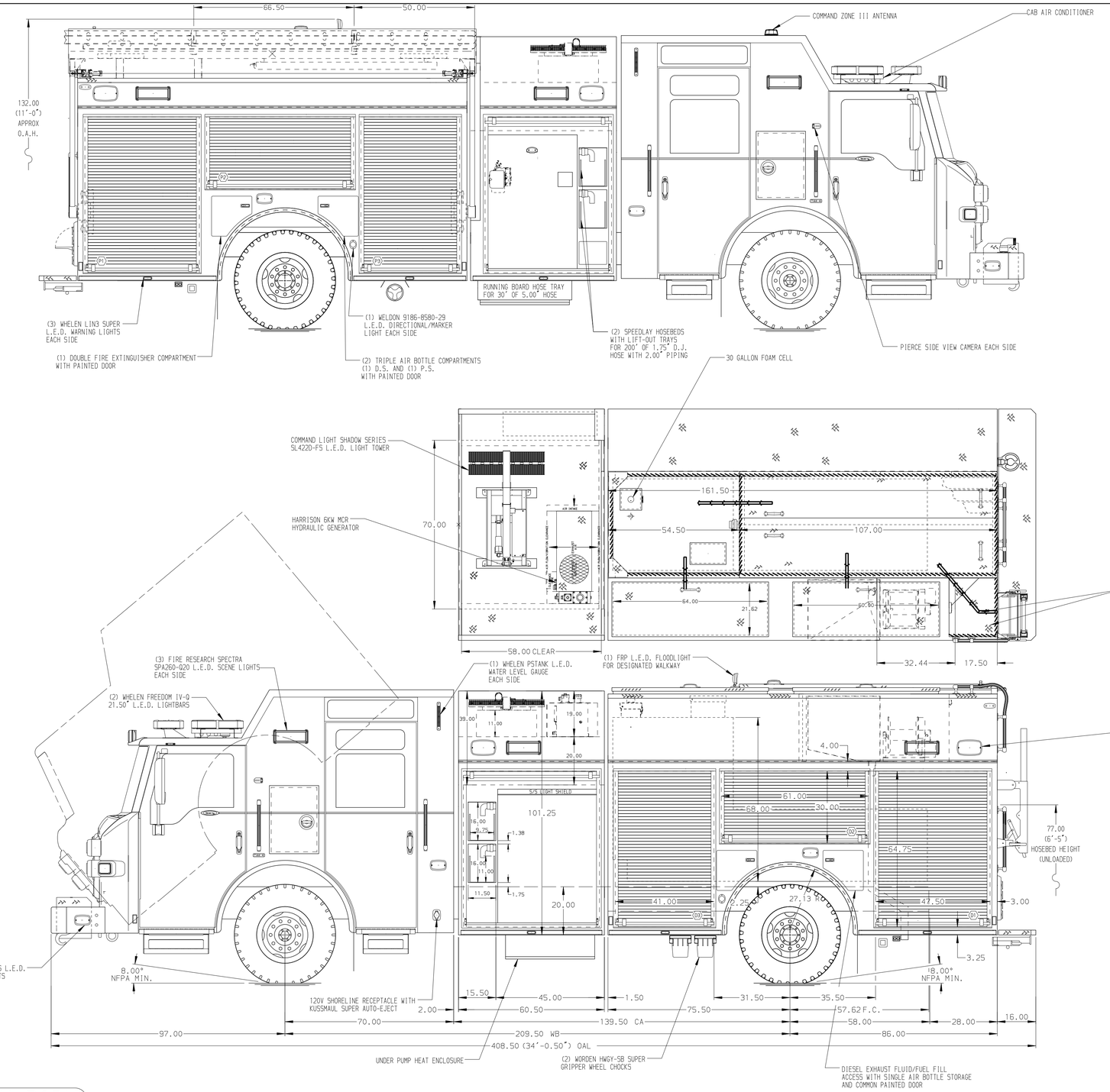

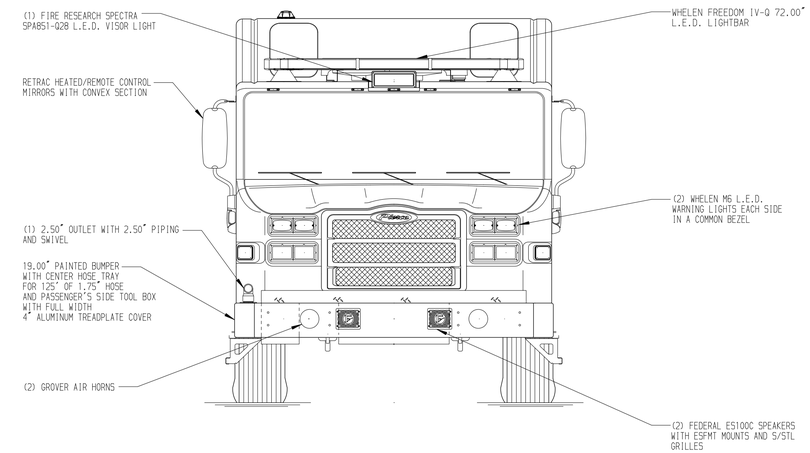

HOSEBED CAPACITIES

1. 200' OF 2.50" D.J. POLY HOSE
2. 850' OF 5.00" D.J. POLY HOSE
3. 300' OF 1.75" D.J. POLY HOSE
4. 200' OF 2.50" D.J. POLY HOSE

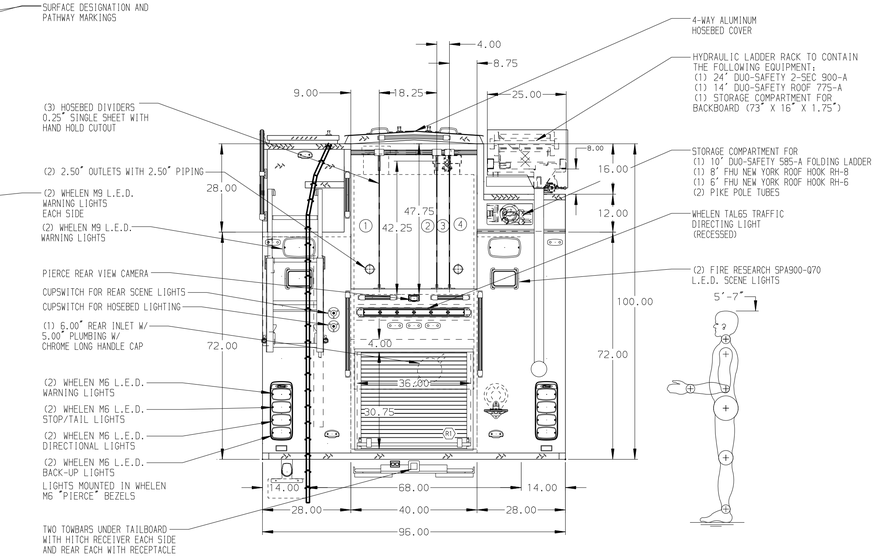

ALUMINUM BODY

NOTE

DIMENSIONS SHOWN ARE APPROXIMATE AND ARE SUBJECT TO MINOR DEVIATIONS AS MAY OCCUR OR BE NECESSARY IN CONSTRUCTION.
MINOR DETAILS NOT SHOWN.

1. BATTERY CHARGER LOCATED IN D3
2. BATTERY CHARGER INDICATOR LOCATED NEAR D.S. SEAT RISER WITH BRACKET
3. DUAL L.E.D. LIGHT STRIPS LOCATED IN HOSE BED
4. SUB-FEED CIRCUIT BREAKER PANEL IN D3
5. ONE FIXED FULL WIDTH/ DEPTH SHELF ON TOP OF THE CTECH CABINET IN D3 AND P1
6. ADJUSTABLE FULL WIDTH/ DEPTH SHELVES TWO IN P1 AND ONE IN D1
7. ONE ADJUSTABLE TILTING SLIDE-OUT TRAY IN P1, P2, AND P3
8. ONE FLOOR MOUNTED SLIDE-OUT TRAY IN R1
9. SWING-OUT TOOL BOARD WITH PEGBOARD PATTERN IN D2
10. THREE SLIDE-OUT TOOL BOARDS WITH PEGBOARD PATTERN IN P1
11. THREE DRAWER CTECH DRAWER ASSEMBLY IN P1
12. SEVEN DRAWER CTECH DRAWER ASSEMBLY IN D3
13. 200# OIL DRY HOPPER IN HATCH COMPARTMENT ABOVE D2
14. ONE VERTICAL PARTITION (SPECIAL HEIGHT) IN D2
15. EQUIPMENT STORAGE MODULE WITH ANGLED FRONT IN P3
16. NYLON STRAP WITH VELCRO IN D1
17. AIR BOTTLE HOLDER WITH TRACKS IN D2
18. WATEROUS AQUIS 2.5 FOAM SYSTEM
19. CIRCUIT BREAKER PANEL IN D3
20. ONE AKRON MODEL ERWC 15-10 ELECTRIC REWIND CORD REEL WITH 200' OF 10/3 CABLE IN HATCH COMPARTMENT ABOVE D1
21. (1) 120V NEMA DUPLEX RECEPTACLE DUPLEX RECEPTACLE EACH SIDE OF THE CENTER EMS CABINET AND ON THE BACK WALL OF THE EMS CABINET
22. (1) 120V DUPLEX RECEPTACLE IN P1
23. (2) 120V NEMA DUPLEX RECEPTACLES IN D3
24. TWO ADDITIONAL POLY TRAYS FOR SPEEDLAYS SHIPPED LOOSE

REV	DATE	BY	CH
3	28OCT17	LST	RWA
2	06OCT17	LST	COR
1	17JUL17	LST	CDU

CHASSIS DATA
MAKE: PIERCE
MODEL: VELOCITY

Pierce MANUFACTURING INC.

TITLE: 2000-D-780P, 750 GAL OF WATER W/ 30 GAL FOAM CELL 161" FHFD, (2) SPDLAYS, HYD. LADDER RACK, GENERATOR

FOR: LITTLE CANADA FIRE DEPARTMENT
LITTLE CANADA, MINNESOTA

DWG NO.: 31423AD

JOB NO.	31423
SCALE	1:24
DATE	
DRAWN BY	LST 28JUN17
CHECKED BY	KBO 30JUN17
SHEET SIZE	D
SHEET NO.	1 OF 1

View File Created 07-NOV-2017 07:23:18