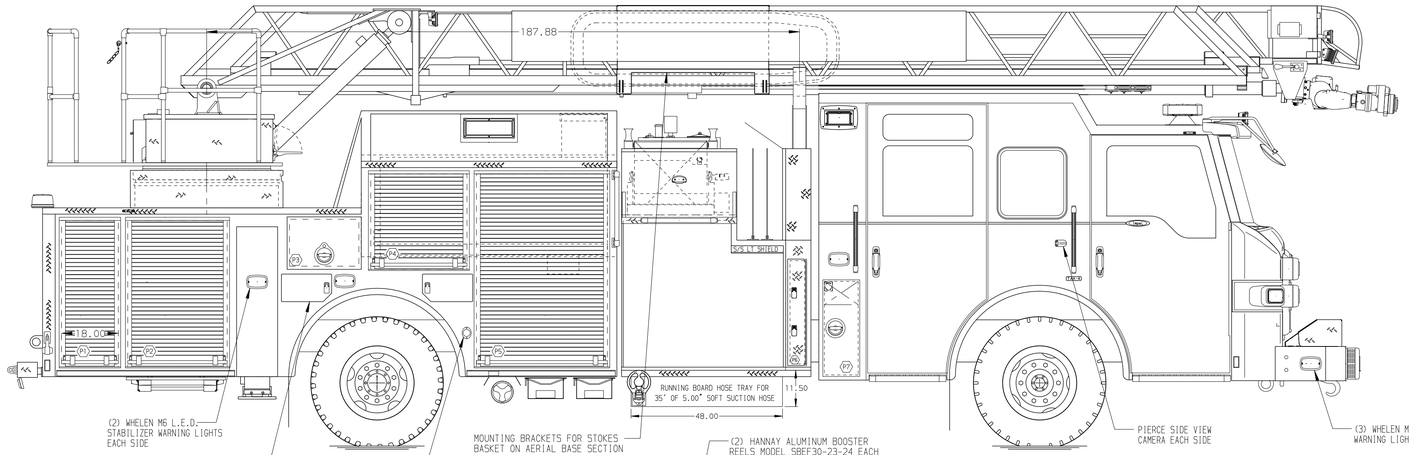

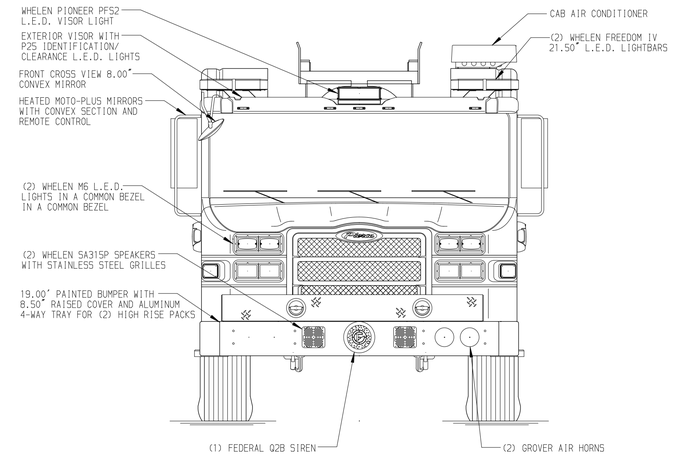

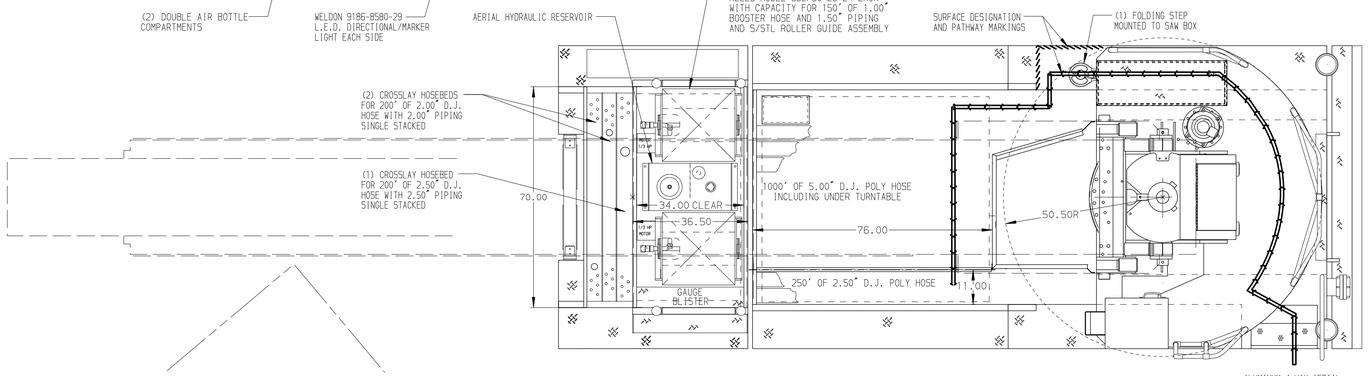

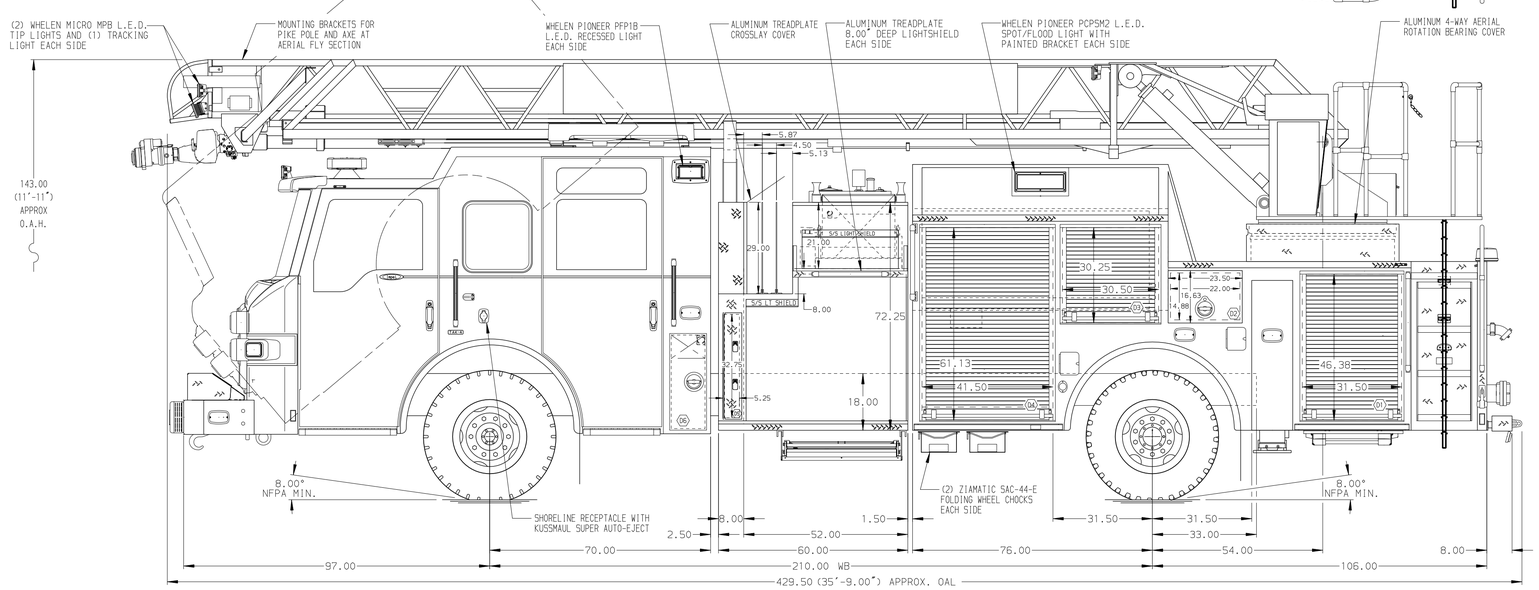

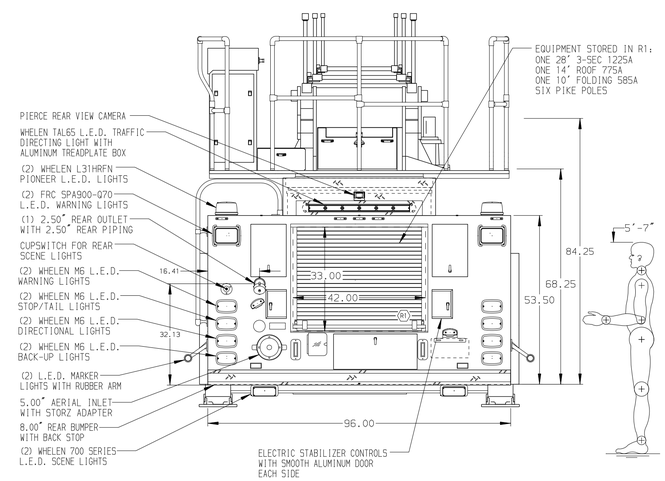

ALUMINUM BODY

NOTE

DIMENSIONS SHOWN ARE APPROXIMATE AND ARE SUBJECT TO MINOR DEVIATIONS AS MAY OCCUR OR BE NECESSARY IN CONSTRUCTION.
MINOR DETAILS NOT SHOWN.

1. AIR INLET WITH DISCONNECT COUPLING LOCATED AT D.S. PUMP PANEL
2. ONSPOT AUTOMATIC TIRE CHAINS TO BE PROVIDED AT REAR
3. BATTERY CHARGER LOCATED BEHIND DRIVER'S SEAT
4. BATTERY CHARGE INDICATOR LOCATED NEAR D.S. SEAT RISER WITH BRACKET
5. DUAL L.E.D. LIGHT STRIPS LOCATED IN HOSE BED
6. ONE ADJUSTABLE FULL WIDTH/FULL DEPTH SHELF IN COMPARTMENTS D1,D3,P2,P4,P5;TWO IN D4
7. ONE FLOOR MOUNTED SLIDE-OUT TRAY IN COMPARTMENTS D1,D4,P1,P2,P5
8. ALUMINUM SWING-OUT TOOLBOARD WITH PAC TRAC IN COMPARTMENT P5
9. PAC TRAC ON THE REAR WALL OF COMPARTMENTS D1,D3,D4,P2,P4,P5
10. ONE 120V DUPLEX RECEPTACLE LOCATED IN COMPARTMENTS D1,P1;TWO LOCATED IN CAB
11. TRIDENT FOLDING STEPS ON AERIAL DEVICE
12. 13.00" SHORTENED AERIAL EGRESS
13. STABILIZERS MODIFIED FOR 18" GROUND PENETRATION
14. L.E.D. LIGHTING ON AERIAL LADDER SECTIONS
15. FIRE RESEARCH 3-WAY INTERCOM SYSTEM BETWEEN AERIAL TIP,PUMP PANEL & TURNTABLE
16. REMOTE MONITOR CONTROLS AT PUMP PANEL
18. AERIAL PEDESTAL RAISED 8.50"
19. MOUNTING FOR 6' APH PIKE POLE WITH ACCESS AT EACH SIDE IN TRANSVERSE COMPARTMENT D6/P7

REV	DATE	BY	CH
1	06NOV17	LWE	DTS
0	040CT17	SHU	DTS

CHASSIS DATA
MAKE: PIERCE
MODEL: IMPEL FR

Pierce MANUFACTURING INC.

TITLE: 75 AERIAL LADDER & BODY ASSEMBLY (75 PAL PUMPER) 500 GALLON WATER TANK
FOR: TOWNSHIP OF SADDLE BROOK SADDLE BROOK, NEW JERSEY
DWG NO.: 31440AD

JOB NO.	31440
SCALE	1:24
DATE	
DRAWN BY	SHU 25JUL17
CHECKED BY	GRM 27JUL17
SHEET SIZE	D
SHEET NO.	1 OF 1

View File Created 07-NOV-2017 07:16:59