PUMPER

BODY
Long Aluminum 2nd Gen Pumper

CHASSIS
Enforcer Chassis

CHASSIS

AXLE, FRONT, CUSTOM
19,500 Lb TAK-4 Axle

AXLE, REAR
24,000 Lb Dana Axle

ENGINE
450 HP Cummins L9 Engine

TRANSMISSION
Allison 5th Gen, 3000 EVS P

BUMPER
22" Extended Steel Painted

CAB
7010 Enforcer Cab

BODY

WATER TANK
500 Gallon Water Tank

COMPT, PUMPER, REAR
30.75" FF Lap Rear Compt

COMPT, PUMPER, DRIVER SIDE
161" Lap Full Height Front & Rear FDLER

COMPT, PUMPER PASS. SIDE
161" Lap Full Height Front & Rear FDLER

FIRE SUPPRESSION

PUMPHOUSE
45" Control Zone Side Mount

PUMP
1250 GPM Hale QMAX

CROSSLAYS, 1.50"
(2) 1.50" Standard Capacity

CROSSLAYS, 2.50"
2.50" Crosslay Not Required

SPEEDLAYS
Speedlays Not Required

GENERATOR
Harrison 3.6kW MSV Hydraulic Generator

Foam System
Foam System Not Required

Foam Cell
Foam Cell Not Required

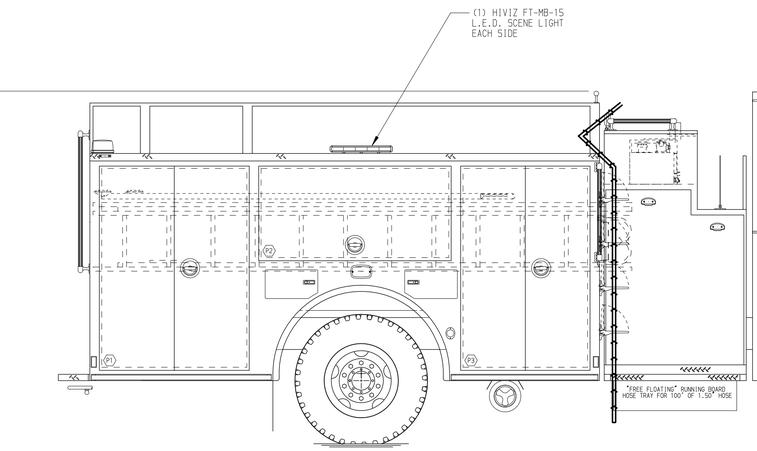

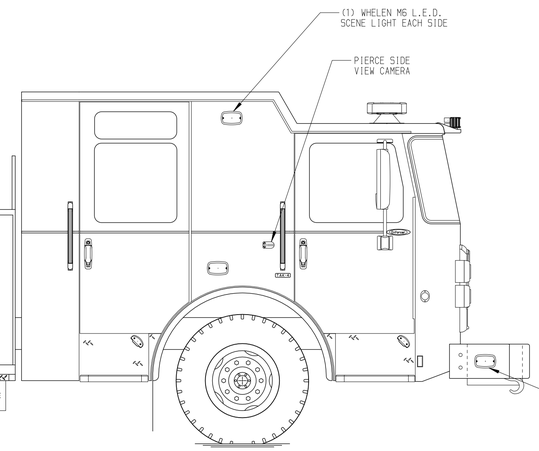

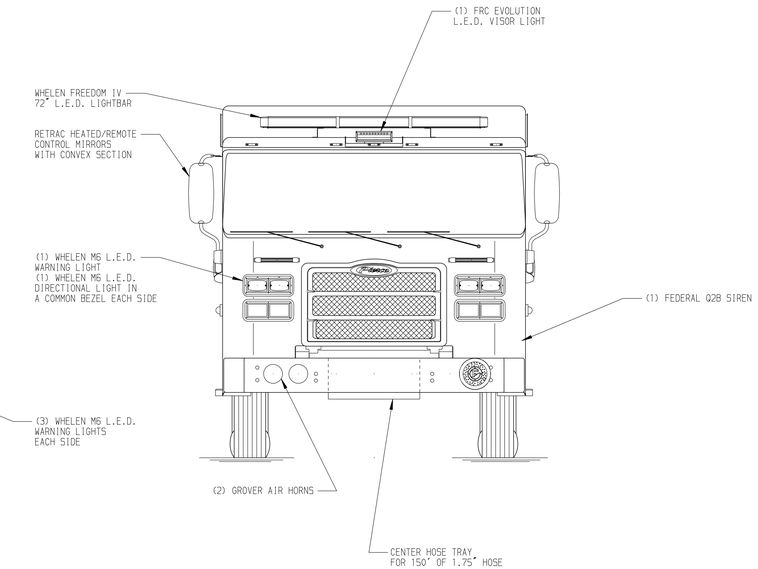

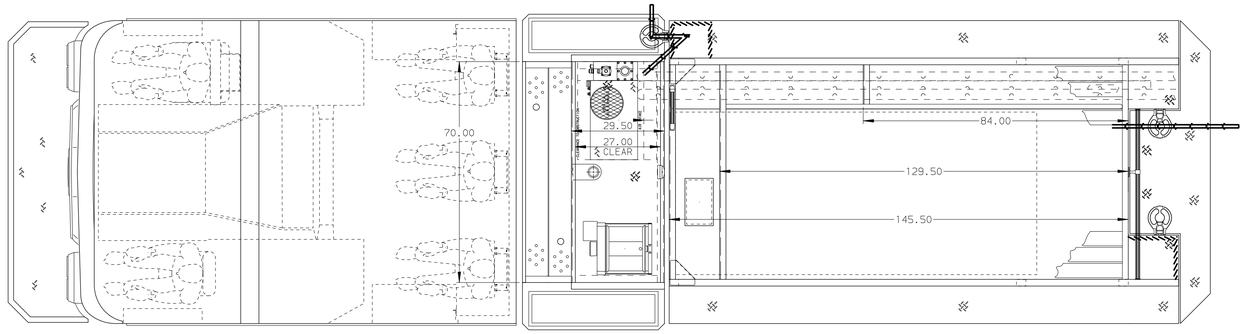

HOSEBED CAPACITY

BED 1
800' OF 3.00" D.J. POLY HOSE BELOW
300' OF 1.75" D.J. POLY HOSE

BED 2
1000' OF 5.00" D.J. POLY HOSE

BED 3
400' OF 3.00" D.J. POLY HOSE

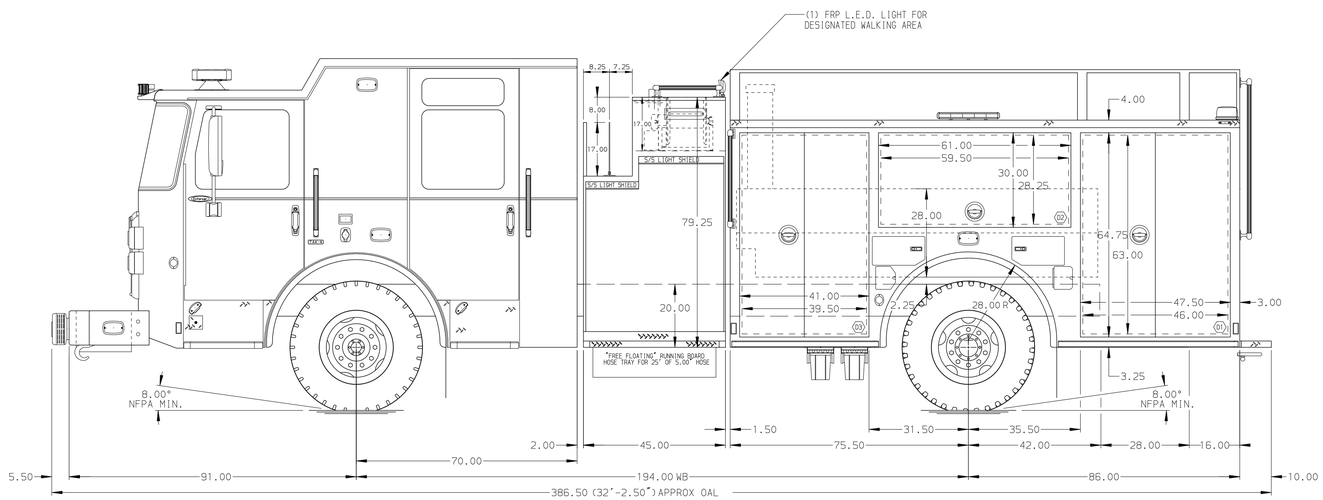

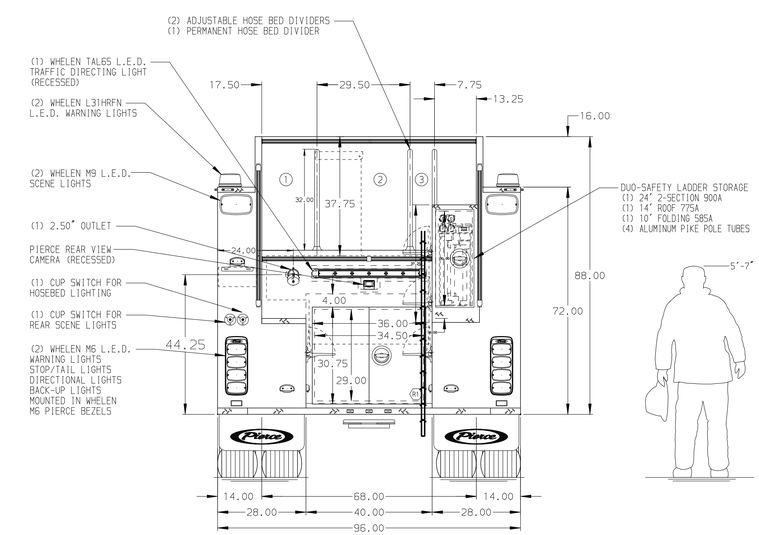

NOTE

DIMENSIONS SHOWN ARE APPROXIMATE AND ARE SUBJECT TO MINOR DEVIATIONS AS MAY OCCUR OR BE NECESSARY IN CONSTRUCTION.
MINOR DETAILS NOT SHOWN.

1. ONE 1.50 OUTLET WITH 2.00 PIPING AND SWIVEL LOCATED IN CENTER BUMPER TRAY
2. SHORELINE RECEPTACLE WITH KUSSMAUL SUPER AUTO-EJECT LOCATED ON DRIVER SIDE OF THE CAB
3. AIR INLET WITH DISCONNECT COUPLING RECESSED IN THE DRIVER SIDE STEPWELL
4. BATTERY CHARGER LOCATED IN EMS COMPARTMENT
5. BATTERY CHARGE INDICATOR LOCATED ON DRIVER SIDE OF THE CAB
6. FOUR ADJUSTABLE SHELVES LOCATED PER SHOP ORDER
7. THREE FLOOR MOUNTED SLIDE-OUT TRAYS LOCATED PER SHOP ORDER
8. PULL STRAP FOR DOORS LOCATED PER SHOP ORDER
9. ONE ADJUSTABLE HEIGHT SLIDE OUT TRAY W/ SPECIAL SIDES LOCATED PER SHOP ORDER
10. PEGBOARD LOCATED ON COMPARTMENT WALL PER SHOP ORDER
11. AKRON CABLE REEL MODEL ERWC-15-10 LOCATED IN CARGO AREA WITH 200' OF 10/3 CABLE
12. CIRCUIT BREAKER PANEL LOCATED IN COMPARTMENT D3

REV	DATE	BY	CH
V	30MAY17	COL	JGO
V	15MAY17	COL	SHE
V	14APR17	COL	JCO

CHASSIS DATA
MAKE: PIERCE
MODEL: ENFORCER

Pierce MANUFACTURING INC.

TITLE: Pierce Pumper Approval Drawing
FOR: Wilson Fire Rescue Department

JOB NO.	31459
SCALE	1:24
DRAWN BY	COL 23MAR17
CHECKED BY	SHE 24MAR17
DWG NO.	31459AD
SHEET SIZE	D
SHEET NO.	1 OF 1

View File Created 31-MAY-2017 07:05:06