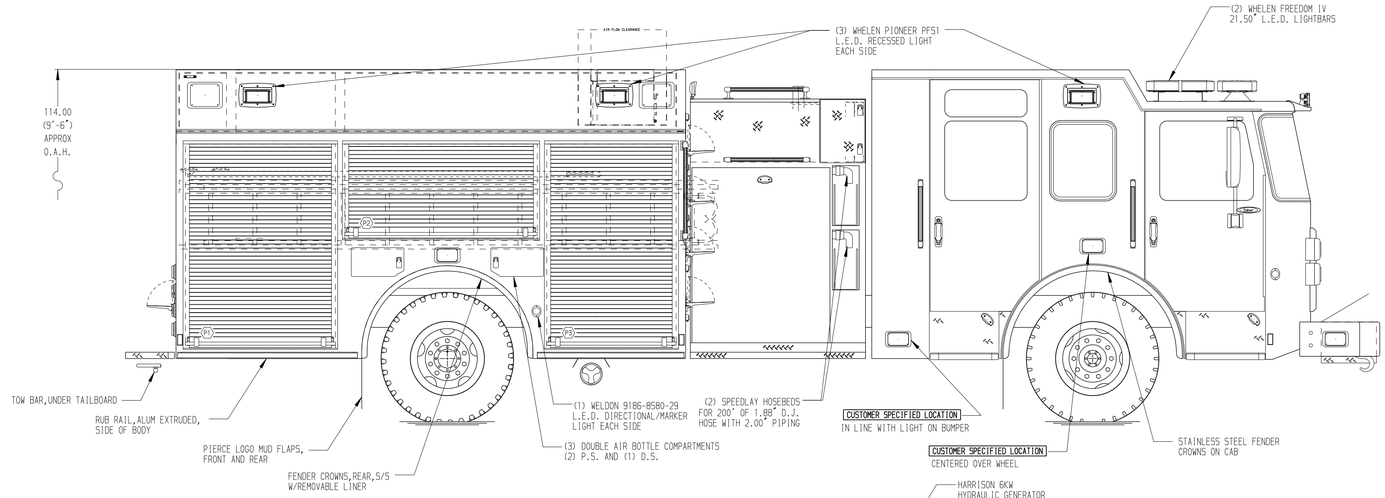

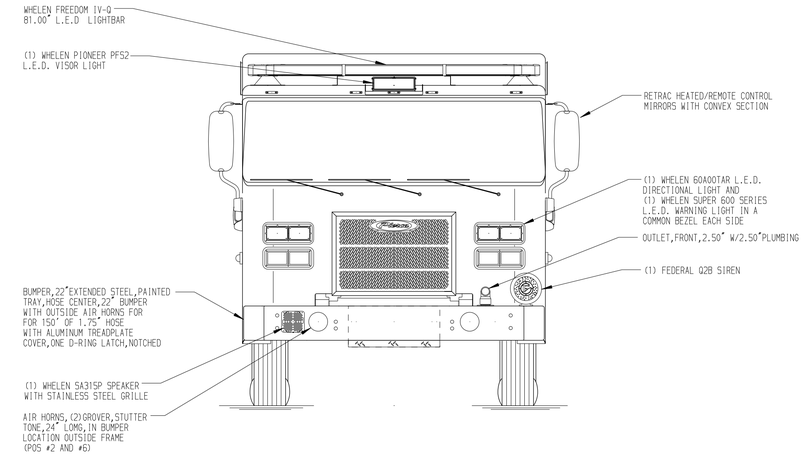

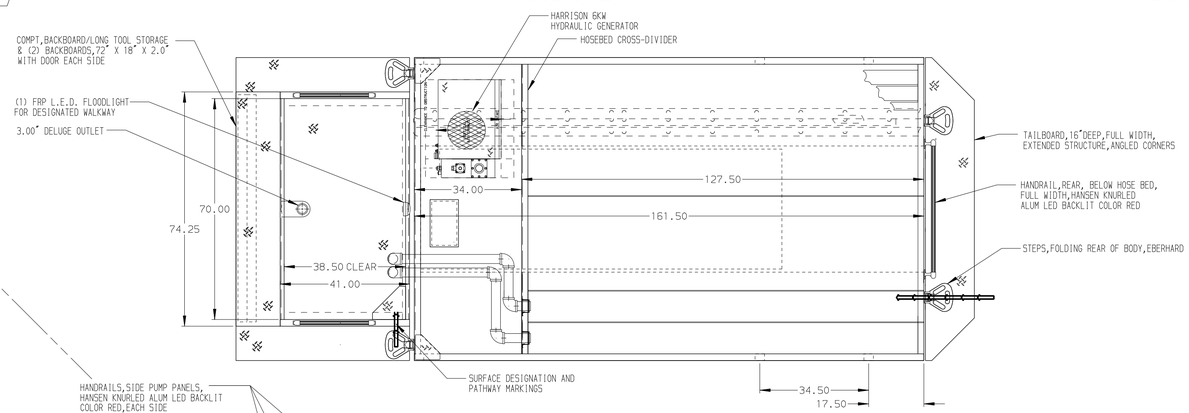

HOSEBED CAPACITIES

1. 200' OF 3.00" D.J. POLY HOSE
2. 200' OF 2.50" D.J. POLY HOSE
3. 800' OF 4.00" D.J. POLY HOSE
4. 400' OF 3.00" D.J. POLY HOSE

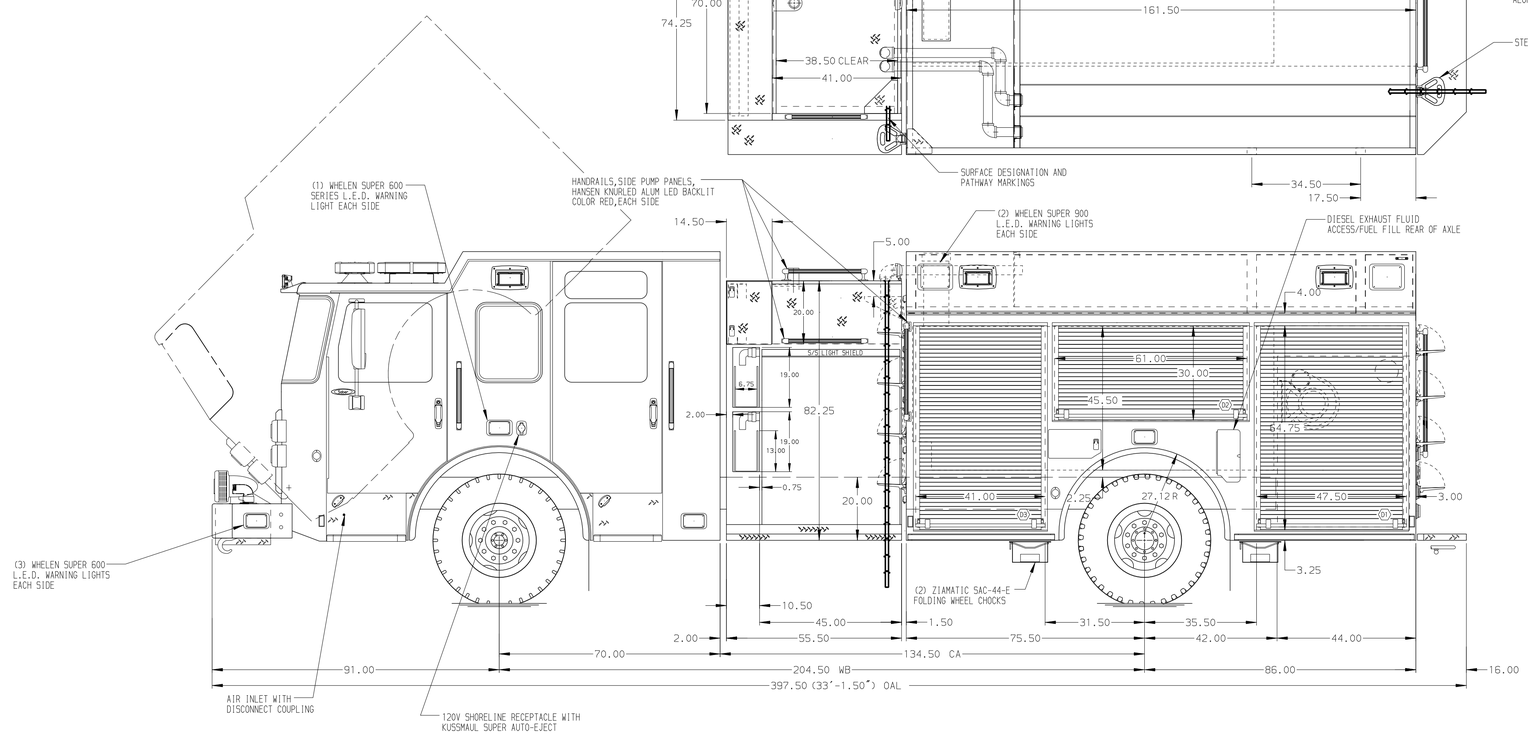

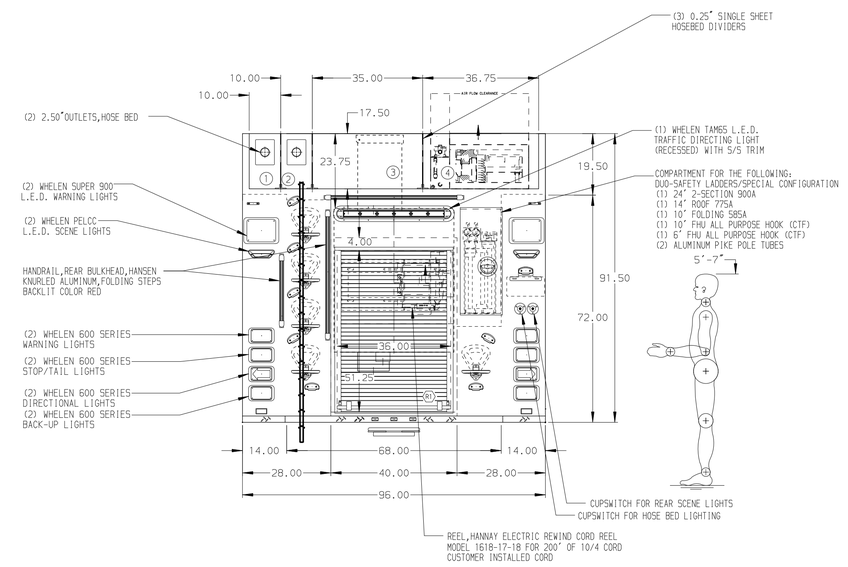

ALUMINUM BODY

NOTE

DIMENSIONS SHOWN ARE APPROXIMATE
AND ARE SUBJECT TO MINOR DEVIATIONS
AS MAY OCCUR OR BE NECESSARY IN
CONSTRUCTION.
MINOR DETAILS NOT SHOWN.

REV	DATE	BY	CH
7	26MAR18	JAF	GSC
6	27FEB18	JAF	GSC
5	20DEC17	JAF	GSC
4	28NOV17	JAF	RWI

CHASSIS DATA
MAKE: PIERCE
MODEL: SABER FR

Pierce MANUFACTURING INC.

TITLE: 1500-D-750 GALLON,161"BODY,DS FULL HGT/DPTH FDLER
(2)SPEEDLAYS,LADDERS THRU BODY,DELUGE,GENERATOR

FOR: CLERMONT FIRE DEPARTMENT
CLERMONT,FLORIDA

DWG NO.: 31473AD

JOB NO.	31473
SCALE	1:24
DATE	
DRAWN BY	LST 25AUG17
CHECKED BY	CCA 25AUG17
SHEET SIZE	D
SHEET NO.	1 OF 1

View File Created 27-MAR-2018 12:07:16