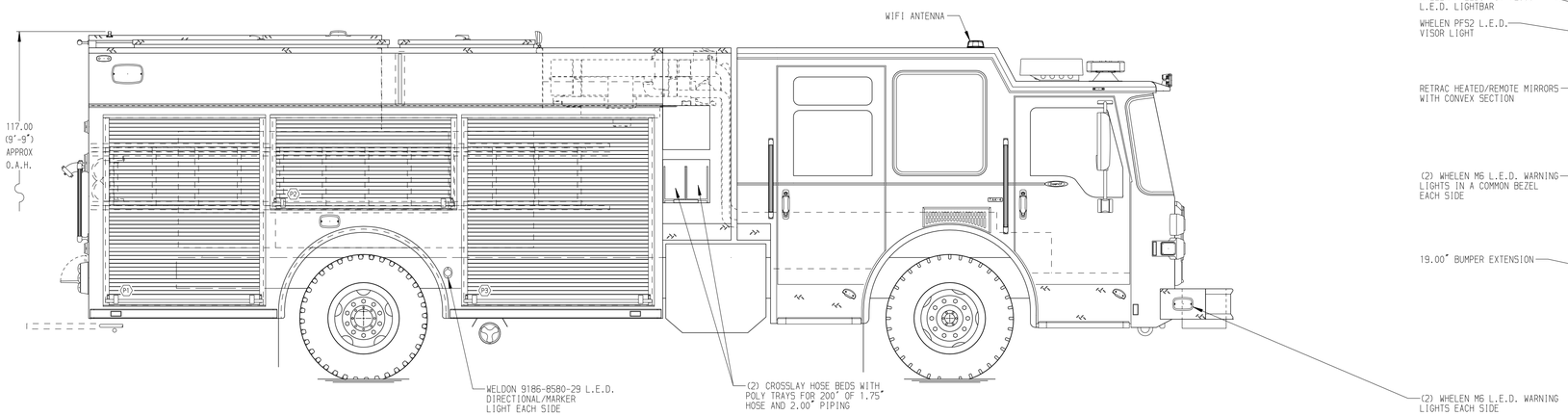

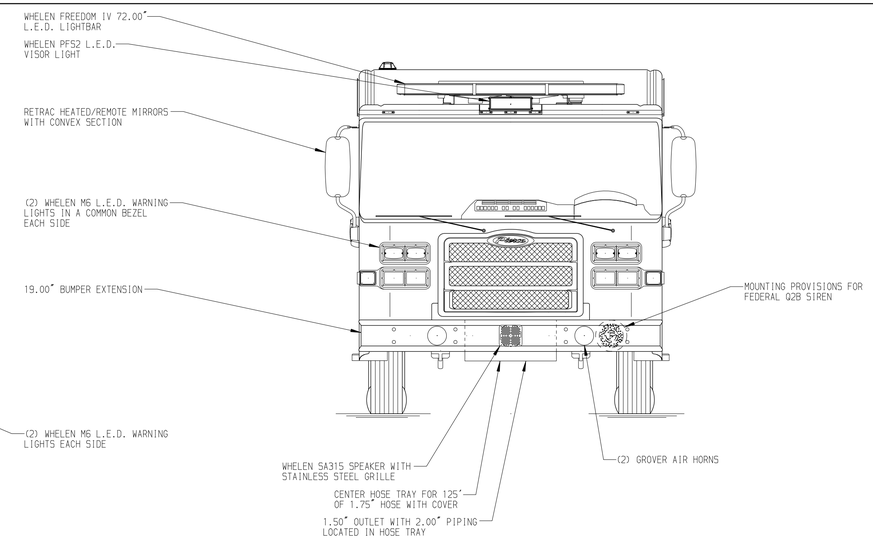

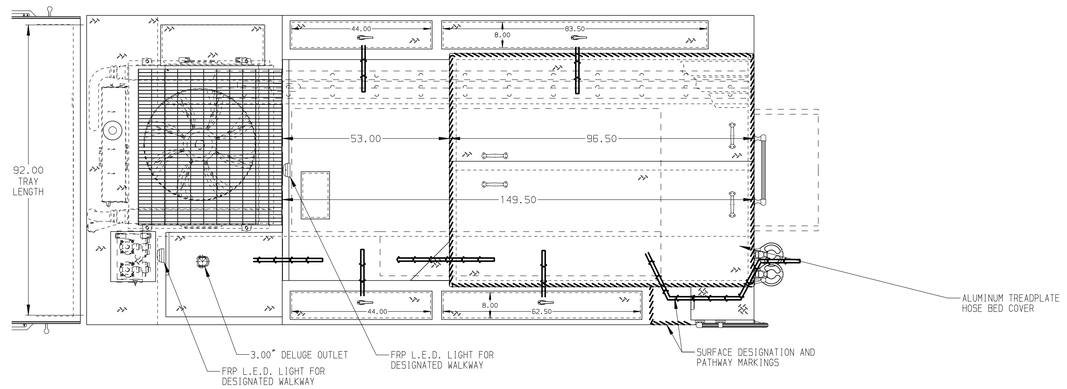

HOSEBED CAPACITIES

1. 750' OF 2.50" D.J. HOSE
2. 400' OF 1.50" D.J. HOSE
3. 750' OF 2.50" D.J. HOSE

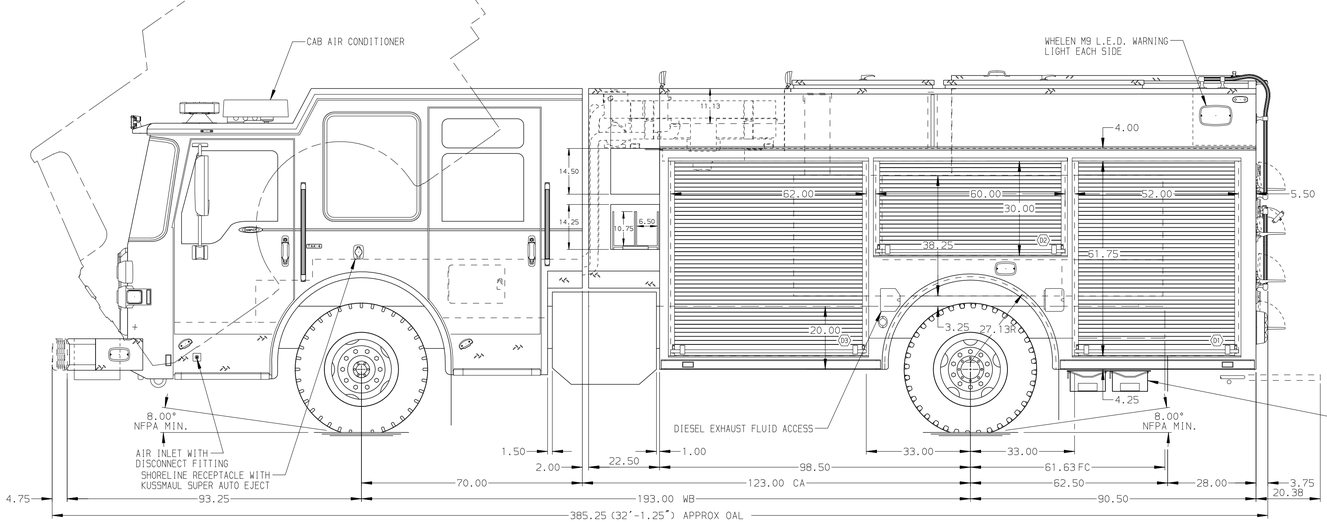

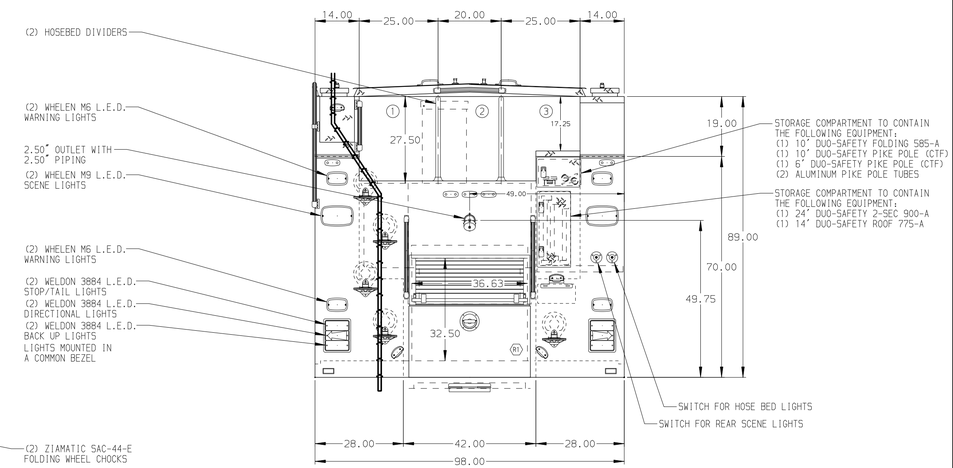

ALUMINUM BODY

NOTE

DIMENSIONS SHOWN ARE APPROXIMATE AND ARE SUBJECT TO MINOR DEVIATIONS AS MAY OCCUR OR BE NECESSARY IN CONSTRUCTION.
MINOR DETAILS NOT SHOWN.

1. BATTERY CHARGER LOCATED IN COMPARTMENT-D3
2. BATTERY CHARGER INDICATOR LOCATED ON DRIVER SEAT WITH BRACKET
3. ONE FULL WIDTH/DEPTH ADJUSTABLE SHELF WITH SIDES IN COMPARTMENT-D1,P1,P3
4. ONE FLOOR MOUNTED SLIDE-OUT TRAY WITH SIDES IN COMPARTMENT-P3

REV	DATE	BY	CH
5	13NOV17	BST	MSA
4	02NOV17	BST	MSA

CHASSIS DATA
MAKE: PIERCE
MODEL: DASH CF

Pierce MANUFACTURING INC.

TITLE: 1500-D-750P,189 PUC PUMPER BODY,DELUGE,(2) X-LAYS LADDERS BETWEEN TANK AND BODY
FOR: ALAMOGORDO FIRE DEPARTMENT, ALAMOGORDO, NM
DWG NO.: 31502AD

JOB NO.	31502
SCALE	1:24
DRAWN BY	BST
DATE	08SEP17
CHECKED BY	SMA
DATE	12SEP17
SHEET SIZE	D
SHEET NO.	1 OF 1

View File Created 16-NOV-2017 07:03:38