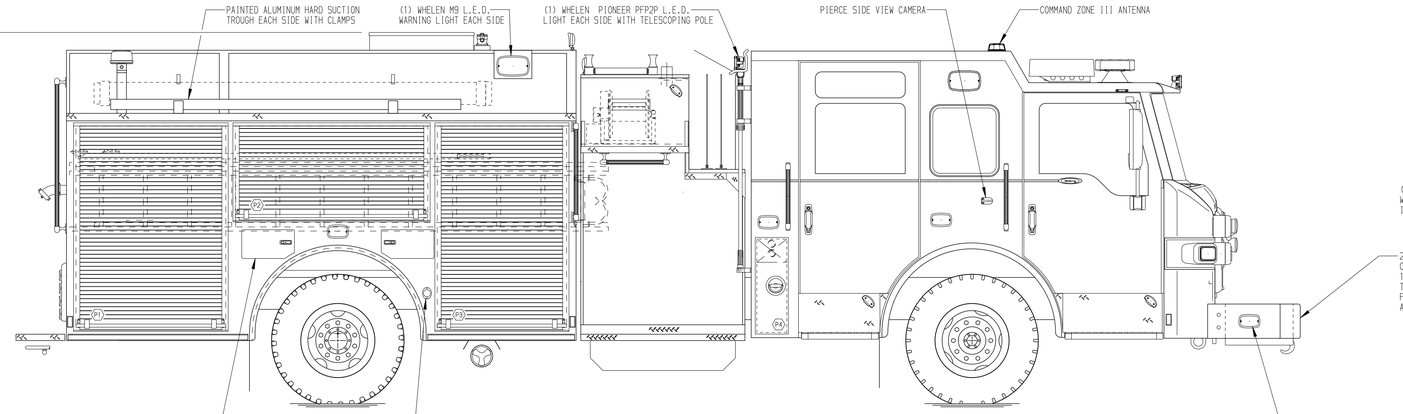

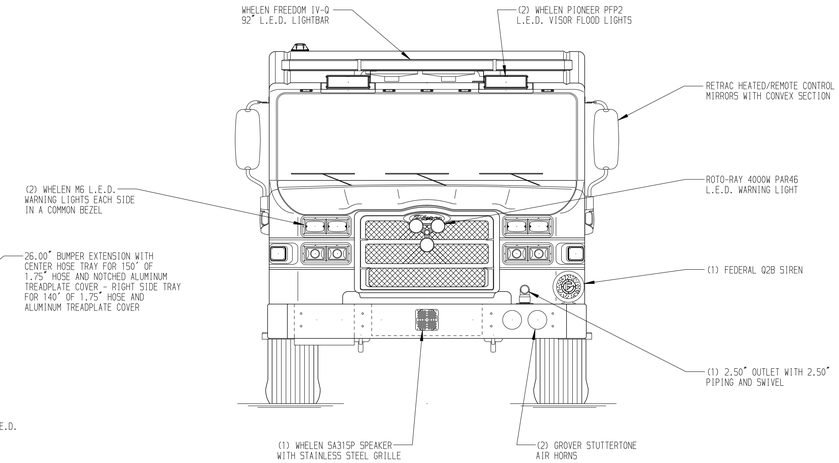

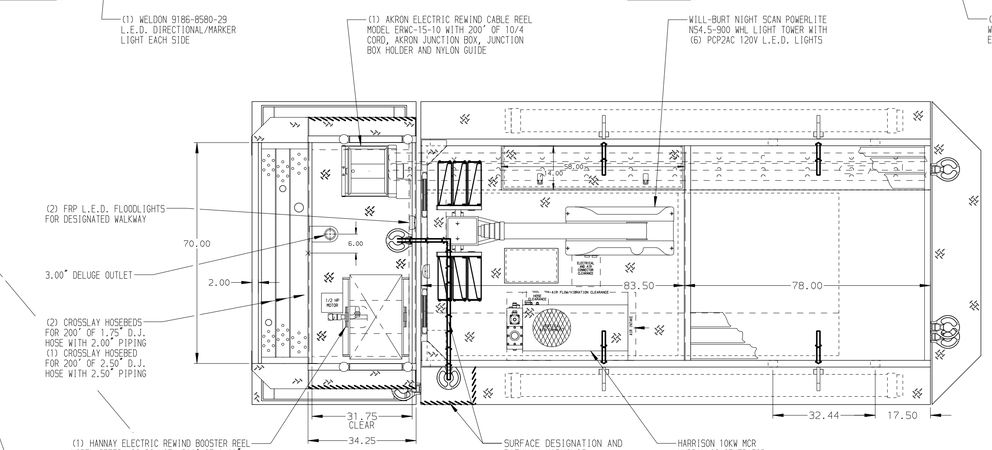

HOSEBED CAPACITIES

1. 250' OF 3.00" D.J. HOSE
2. 1200' OF 4.00" D.J. HOSE

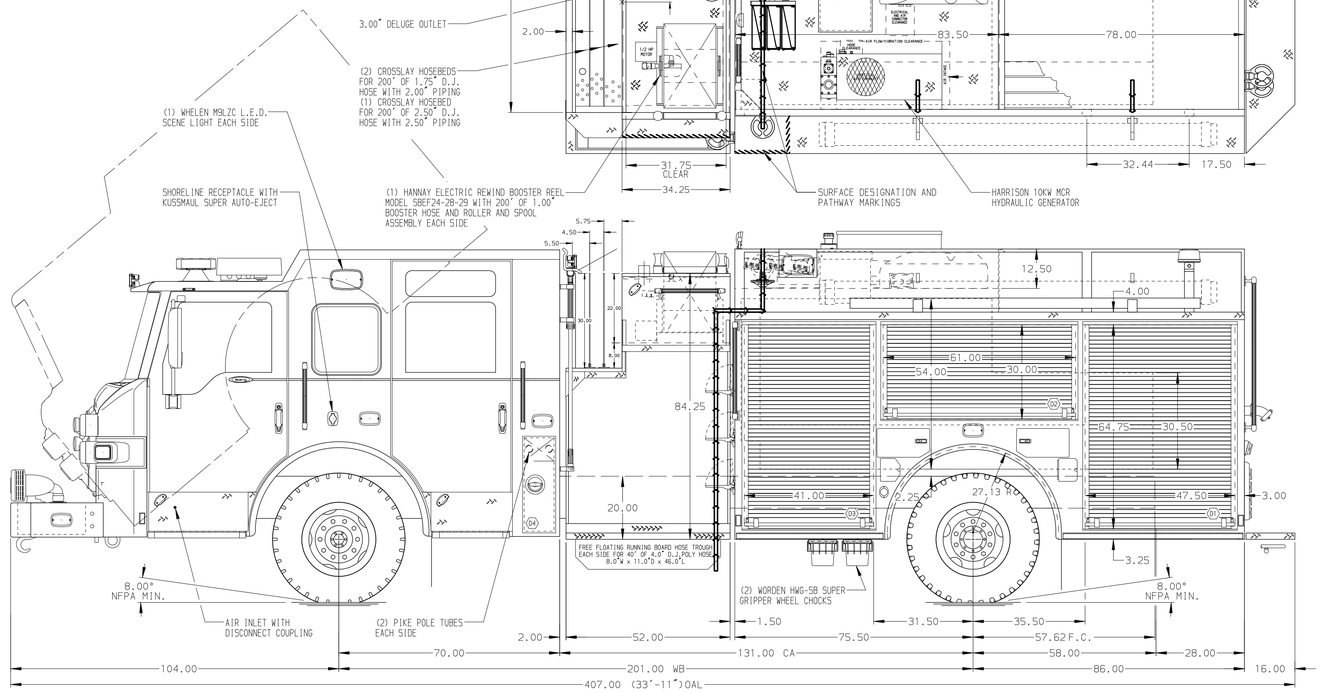

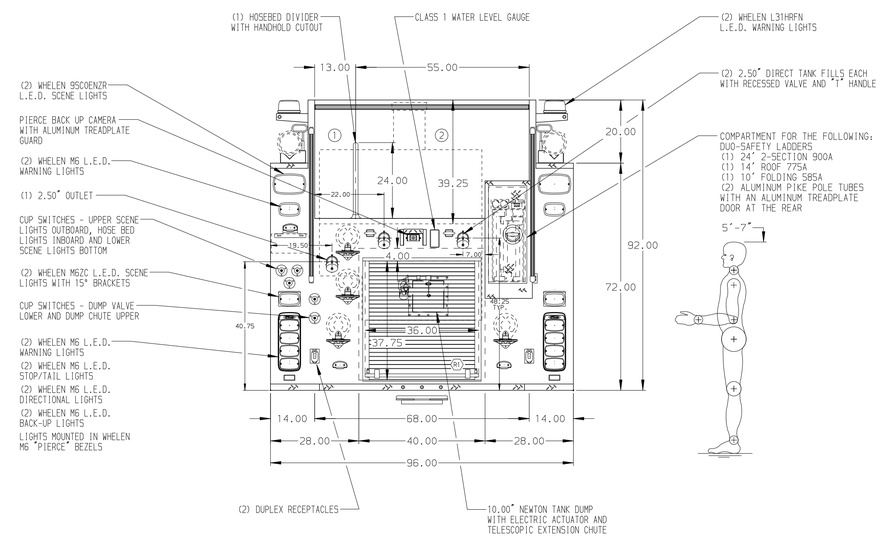

ALUMINUM BODY

SIDE ROLL AND FRONTAL IMPACT PROTECTION

NOTE

DIMENSIONS SHOWN ARE APPROXIMATE AND ARE SUBJECT TO MINOR DEVIATIONS AS MAY OCCUR OR BE NECESSARY IN CONSTRUCTION.
MINOR DETAILS NOT SHOWN.

1. INSTA-CHAIN AUTOMATIC TIRE CHAINS TO BE PROVIDED AT REAR
2. BATTERY CHARGER LOCATED BEHIND DRIVER'S SEAT
3. BATTERY CHARGE INDICATOR LOCATED NEAR DRIVER'S SEAT RISER WITH BRACKET
4. DUAL L.E.D. LIGHT STRIPS LOCATED IN HOSE BED
5. EIGHT ADJUSTABLE FULL WIDTH/DEPTH SHELVES - TWO IN COMPARTMENTS D1, D3, P1 AND P3
6. ALUMINUM PEGBOARD WITH TRACKS ON THE REAR WALL OF COMPARTMENTS D2 AND D3
7. ONE SWING-OUT TOOL BOARD WITH PEGBOARD PATTERN IN COMPARTMENT D2
8. CTECH DRAWER ASSEMBLY IN COMPARTMENT D3
9. ONE VERTICAL PARTITION IN COMPARTMENTS D1 AND D3
10. CIRCUIT BREAKER PANEL IN COMPARTMENT D3
11. PARTITION BETWEEN COMPARTMENTS D1/R1 AND P1/R1
12. MIC AND SPEAKER COMPARTMENT LOCATED ON DRIVER'S SIDE PUMP PANEL

REV	DATE	BY	CH
7	12JAN18	JRO	RWA
6	06DEC17	JRO	PJP
5	030CT17	JRO	WKL

CHASSIS DATA
MAKE: PIERCE
MODEL: VELOCITY FR

Pierce MANUFACTURING INC.

TITLE: 1500-D-1000 WATER, 161" BODY, LADDERS BESIDE TANK CROSSLAYS, LIGHT TOWER, GENERATOR, BOOSTER REEL
FOR: SILVER VALLEY FIRE DEPARTMENT LEXINGTON, NORTH CAROLINA
DWG NO.: 31554AD

JOB NO.	31554
SCALE	1:24
DATE	28SEP17
DRAWN BY	JRO
CHECKED BY	WKL
SHEET SIZE	D
SHEET NO.	1 OF 1

View File Created 12-JAN-2018 12:06:07