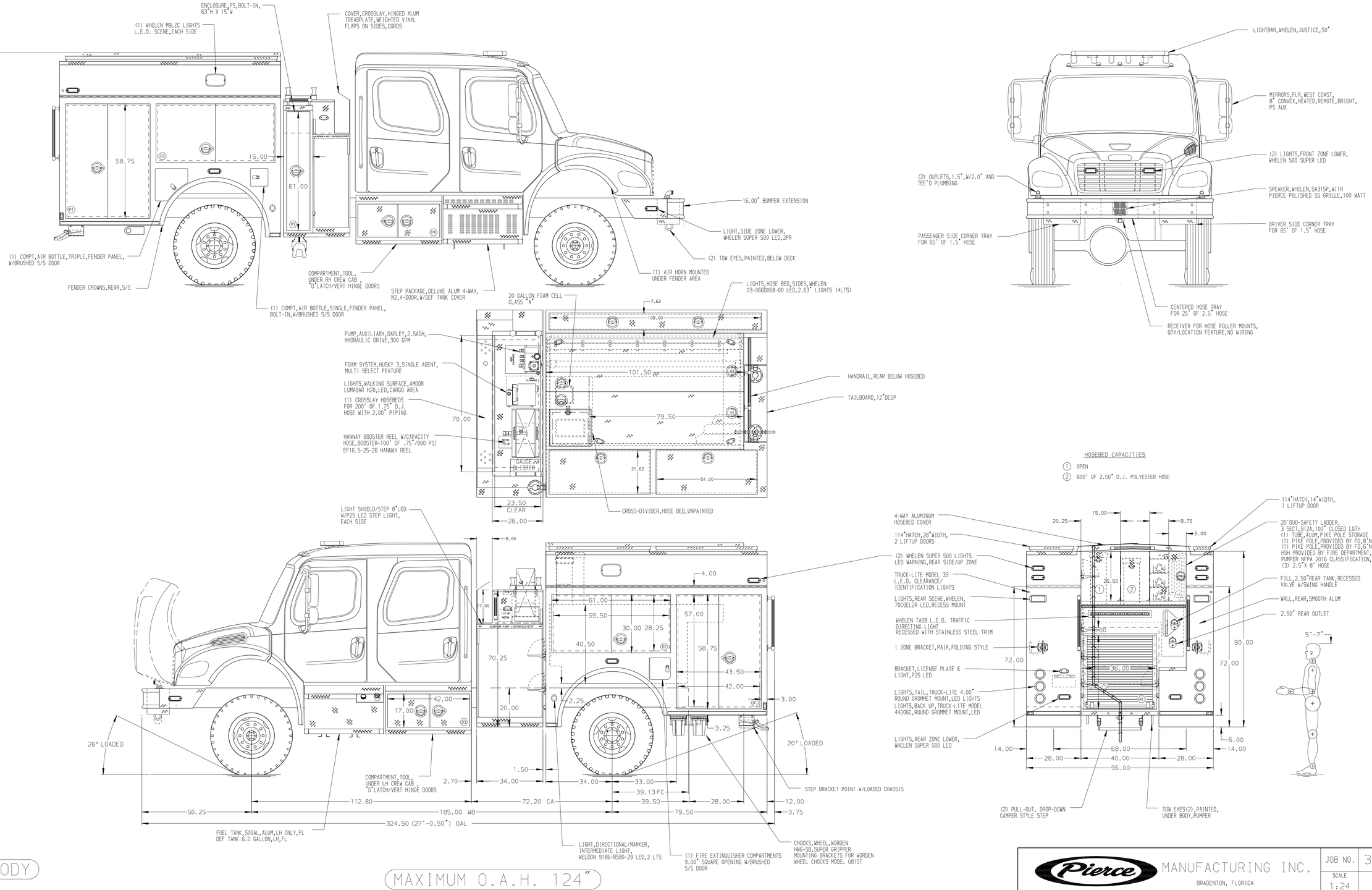

ALUMINUM BODY

MAXIMUM O.A.H. 124"

NOTE

DIMENSIONS SHOWN ARE APPROXIMATE AND ARE SUBJECT TO MINOR DEVIATIONS AS MAY OCCUR OR BE NECESSARY IN CONSTRUCTION.
MINOR DETAILS NOT SHOWN.

REV	DATE	BY	CH
4	04APR18	RWI	JAF
3	21DEC17	JAF	RWI
2	21NOV17	JLA	RWI
1	14NOV17	JLA	RWI
0	17AUG17	RWI	JAF

CHASSIS DATA
MAKE: FL
MODEL: M2-106 4X4

Pierce MANUFACTURING INC.
BRADENTON, FLORIDA

TITLE: 500-D-520 POLY,500 W,20 FOAM,114"BDY,DS FULL HGT&DPTH 34"SIDE CONTROL,(1)CROSSLAYS,6"RAISED REAR
FOR: REDDING FIRE DEPARTMENT REDDING, CALIFORNIA
DWG NO. 31642AD

JOB NO.	31642
SCALE	1:24
DATE	
DRAWN BY	JLA
10JUL17	
CHECKED BY	RWI
01AUG17	
SHEET SIZE	D
SHEET NO.	1 OF 1

View File Created 04-APR-2018 13:12:13