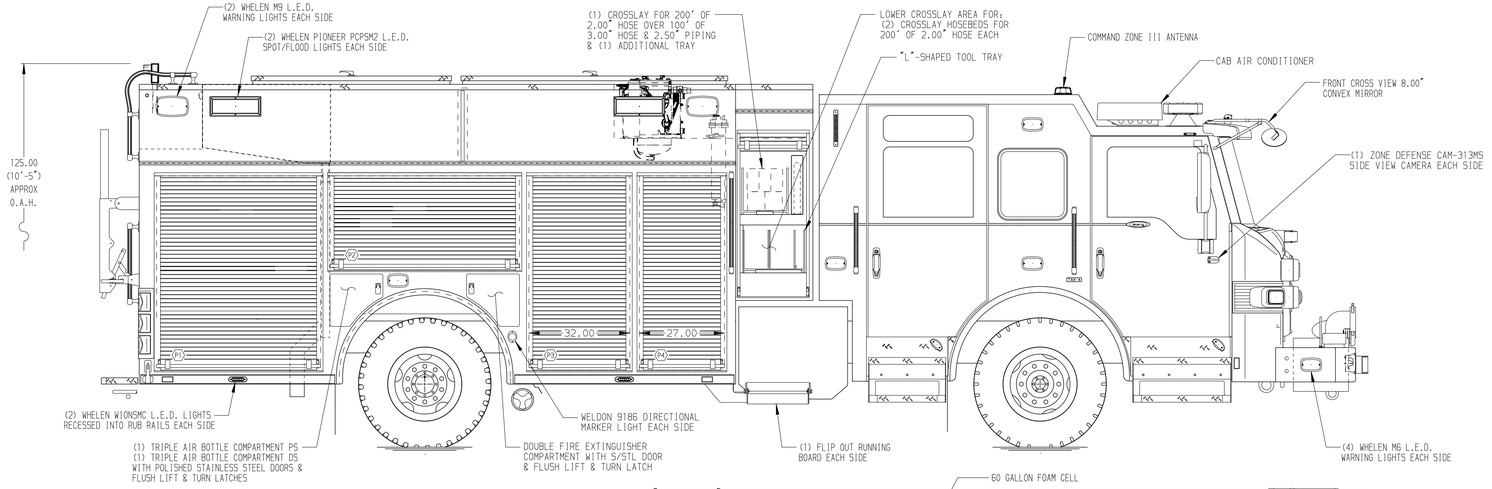

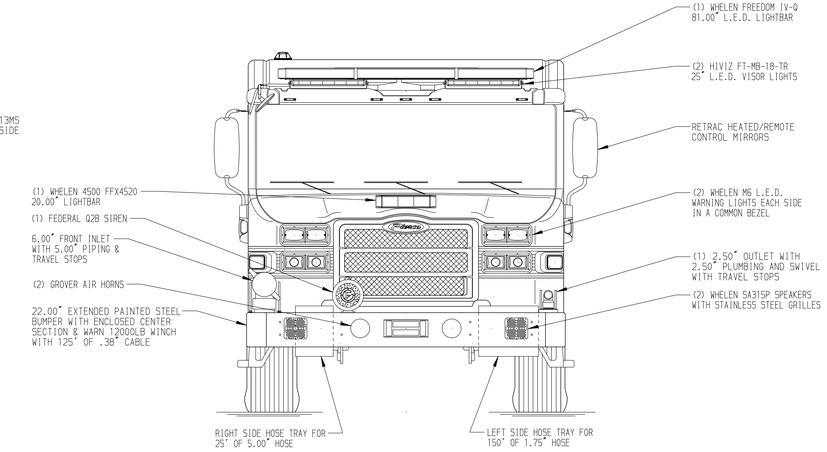

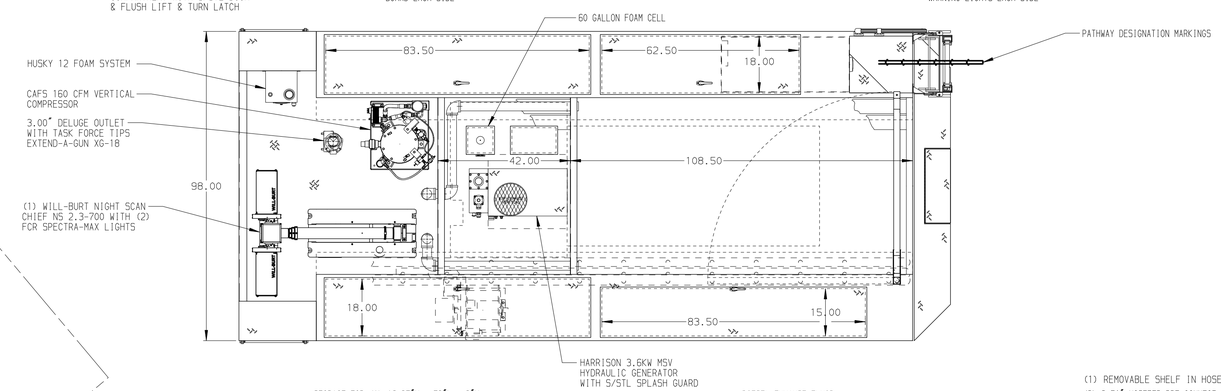

HOSEBED CAPACITIES

1. - 100' OF 5.00" D.J. HOSE
2. - 300' OF 2.00" D.J. HOSE
3. - 300' OF 3.00" D.J. HOSE
4. -1450' OF 4.00" D.J. HOSE
5. - 200' OF 3.00" D.J. HOSE

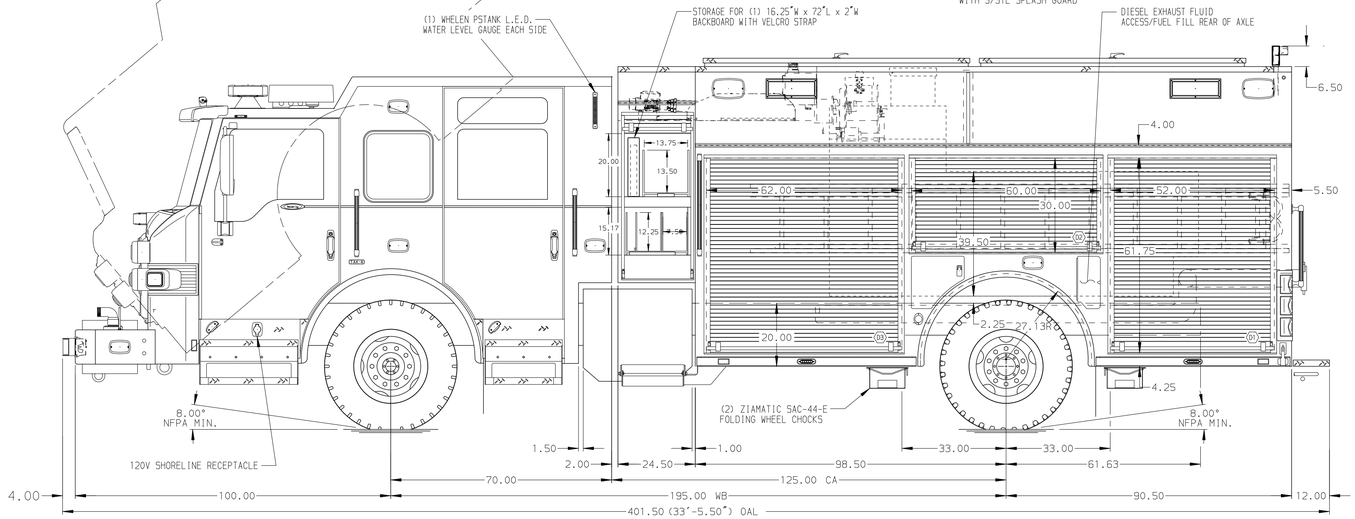

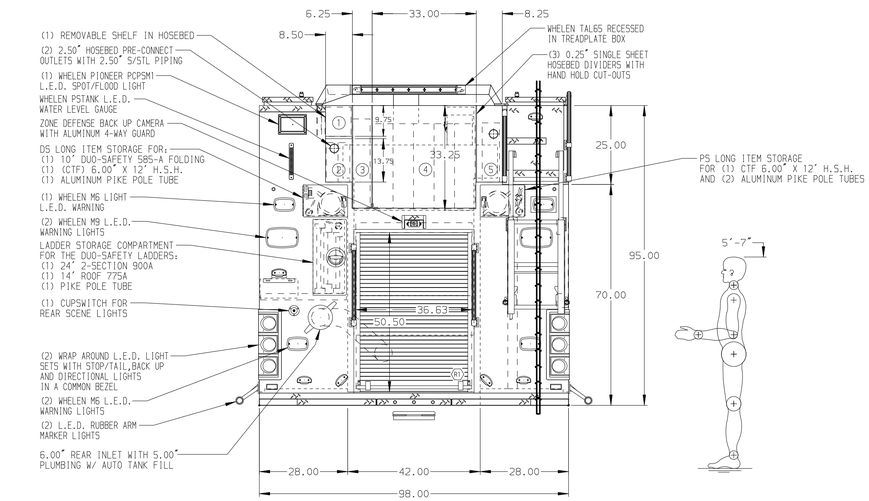

ALUMINUM BODY

SIDE ROLL AND FRONTAL IMPACT PROTECTION

NOTE

DIMENSIONS SHOWN ARE APPROXIMATE AND ARE SUBJECT TO MINOR DEVIATIONS AS MAY OCCUR OR BE NECESSARY IN CONSTRUCTION.
MINOR DETAILS NOT SHOWN.

1. RUD AUTOMATIC TIRE CHAINS TO BE PROVIDED AT REAR
2. BATTERY CHARGER INDICATOR LOCATED NEAR DRIVER'S SEAT RISER WITH BRACKET
3. P2S WALKING SURFACE LIGHTS TO BE INSTALLED IN CARGO AREA
4. AMDOR AY-9220 L.E.D. STRIP LIGHTS TO BE INSTALLED IN HATCH COMPARTMENTS
5. TWO ADJUSTABLE FULL WIDTH/DEPTH SHELVES W/ SPC. LOW SIDES IN R1 & TBD
6. ONE ADJUSTABLE FULL WIDTH/DEPTH SHELF LOCATED IN D1, P2, & P4
7. THREE ADJUSTABLE FULL WIDTH/DEPTH SHELVES W/ SPC. SIDES IN P1, ONE IN P4
8. ONE ADJUSTABLE SLIDE-OUT TRAY IN COMPARTMENT D3
9. ONE FLOOR MOUNTED SLIDE-OUT TRAY IN COMPARTMENT P1
10. TWO SLIDE-OUT ALUMINUM TOOL BOARDS IN COMPARTMENT P3, ONE IN R1
11. ONE SWING-OUT ALUMINUM TOOL BOARD IN COMPARTMENT D2
12. ANGLED ALUMINUM TREADPLATE FOR CRIBBING LOCATED IN COMPARTMENT P2
13. ONE VERTICAL BOLT-IN PARTITION BETWEEN COMPARTMENTS P1-R1
14. ALUMINUM PEGBOARD WITH TRACKS ON THE REAR WALL OF COMPARTMENT D2 & D3
15. ONE VERTICAL PARTITION W/ 3RD GEN TRACKS IN COMPARTMENT P1
16. MOUNTING RACK FOR (4) FIRE EXTINGUISHERS LOCATED P1
17. MOUNTING RACK FOR (3) FIRE EXTINGUISHERS LOCATED P3
18. CIRCUIT BREAKER PANEL TO BE INSTALLED LOW ON FRONT BULKHEAD WALL IN D3
19. ONE HANNAY ELECTRIC REWIND CORD REEL MODEL 1618-17-18 WITH 200' OF 10/3 CABLE
20. GAST SHCD-10-M500X AIR COMPRESSOR INSTALLED BEHIND DRIVER SEAT
21. DUAL AMDOR XX9929 L.E.D. LIGHTS IN HOSEBED AREA
22. 250LB OIL-DRY HOPPER IN COMPARTMENT P1
23. SAC-44-E WHEEL CHOCKS TO BE FURNISHED BY DEALER
24. AIR INLET/OUTLET WITH DISCONNECT FITTING TO BE LOCATED ON DS PUMP PANEL
25. BATTERY CHARGER TO BE INSTALLED BEHIND DRIVER'S SEAT
26. ONE 15/20A 120V RECEPTACLE TO BE INSTALLED HIGH ON FRONT WALL IN P1, TOP OF REAR BULKHEAD IN D1, AND HIGH ON FRONT WALL IN COMPARTMENT P4
27. ONE VERTICAL PARTITION IN COMPARTMENT R1
28. ONE 20A RECEPTACLE ON FRONT BULKHEAD JUST BELOW CHANGE OF DEPTH AT DOOR FRAME IN D1

REV	DATE	BY	CH
B	23MAR18	GVH	SHA
A	02MAR18	GVH	SHA

CHASSIS DATA
MAKE: PIERCE
MODEL: VELOCITY FR

Pierce MANUFACTURING INC.

TITLE: 1500-D-690P, 60GAL FOAM, 189" FH/FD RESCUE BODY (3) CROSSLAYS, DELUGE, GENERATOR, LT TWR, CABLE REEL
FOR: COUNTY OF ALBEMARLE FIRE & RESCUE CHARLOTTESVILLE, VIRGINIA
DWG NO.: 31865AD

JOB NO.	31865
SCALE 1:24	DATE
DRAWN BY GVH	14NOV17
CHECKED BY SMA	14NOV17
SHEET SIZE D	SHEET NO. 1 OF 1

View File Created 27-MAR-2018 07:22:20