PASSENGER'S SIDE COMPARTMENTS CONTAIN THE FOLLOWING:

COMPARTMENT P1 CONTAINS:
- (1) VERTICAL COMPARTMENT DIVIDER
- (3) STD DEPTH ADJ SHELVES
- RACK FOR SIX SCBA BOTTLES
- (1) SPACESAVER 2-BOTTLE FILL ENCLOSURE
- (1) CASCADE SYSTEM CONTROL PANEL
- REGULATOR AND GAUGE FOR TOOL AIR REEL
- (1) HIGH PRESSURE AIR REEL W/200' OF HOSE
- (1) TOOL AIR REEL W/200' OF HOSE
- TOOL COMPRESSOR CONTROL PANEL

COMPARTMENT P2 CONTAINS:
- (1) STD DEPTH ADJ SLIDE OUT/TILT TRAY

COMPARTMENT P3 CONTAINS:
- (1) STD DEPTH ADJ SLIDE OUT/TILT TRAY

COMPARTMENT P4 CONTAINS:
- (1) HORIZONTAL FLOOR EXTENSION
- (2) 1/2 DEPTH ADJ SLIDE OUT/TILT TRAYS
- (1) STD DEPTH FLOOR MOUNTED TRAY
- (1) VERTICAL COMPARTMENT DIVIDER
- RACK FOR FOUR EXTINGUISHERS
- (2) 1/2 DEPTH SLIDE OUT TOOLBOARDS
- (1) VERTICAL REAR WALL DIVIDER

COMPARTMENT P5 CONTAINS:
- (1) RACK FOR 2 PIKE POLES
- (1) HORIZONTAL FLOOR EXTENSION
- (1) L-SHAPED COMPARTMENT DIVIDER
- (2) STD DEPTH ADJ SHELVES
- (1) VERTICAL REAR WALL DIVIDER
- (1) ELECTRIC CORD REEL WITH 200' OF 10/3 YELLOW CORD
- (1) HYDRAULIC REEL WITH 100' OF HOSE

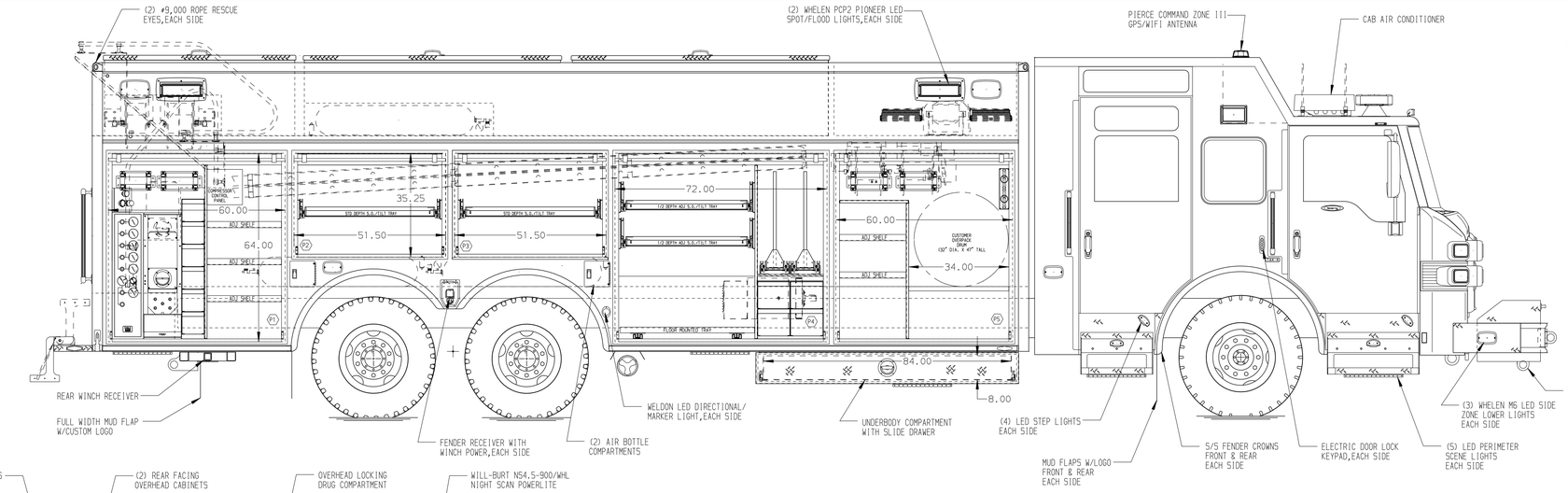

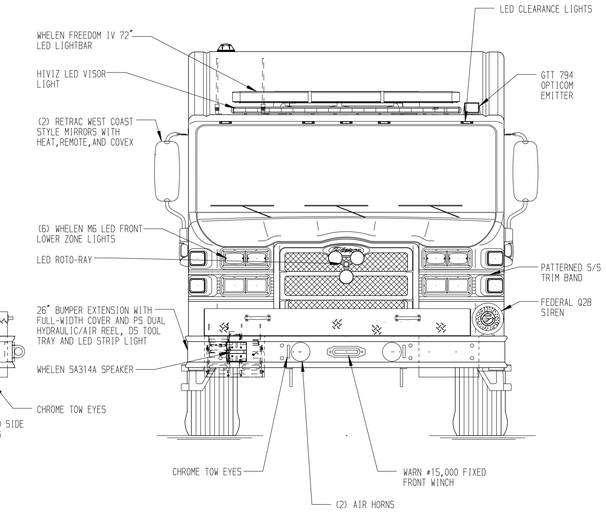

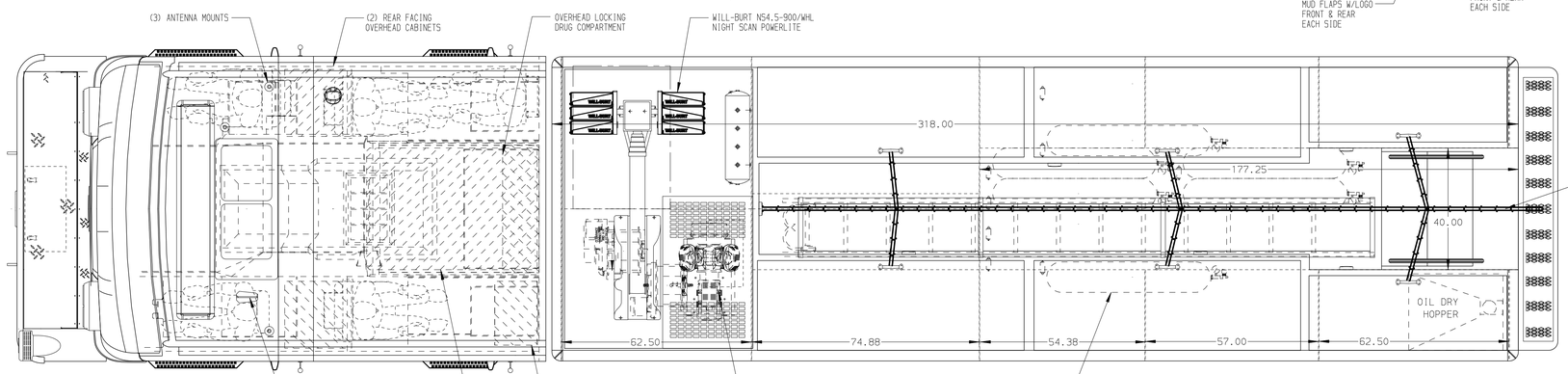

REAR COMPARTMENT CONTAINS THE FOLLOWING:

COMPARTMENT R1 CONTAINS:
-

COMPARTMENT R2 CONTAINS:
- (1) RACK FOR THE FOLLOWING:
  - (2) 28' 2-SECTION LADDERS
  - (2) 16' ROOF LADDERS MTD AT 30EGREES
  - (1) 10' FOLDING LADDER
  - (4) PIKE POLES
- (2) LUMBER STORAGE TROUGHS

DRIVER'S SIDE COMPARTMENTS CONTAIN THE FOLLOWING:

COMPARTMENT D1 CONTAINS:
- (1) OIL DRY HOPPER
- (1) VERTICAL COMPARTMENT DIVIDER
- CARGO NETTING
- ALUMINUM TREADPLATE ON COMPARTMENT FLOOR
- FLOOR PITCHED 5 DEGREES IN COMPARTMENT

COMPARTMENT D2 CONTAINS:
- (1) STD DEPTH ADJ SLIDE OUT/TILT TRAY

COMPARTMENT D3 CONTAINS:
- (1) RACK FOR 10 AIR BAGS
- (1) VERTICAL COMPARTMENT DIVIDER
- (2) STD DEPTH ADJ SHELVES

COMPARTMENT D4 CONTAINS:
- (6) POLY TOOL BOXES W/ROLLER AND DURASURF
- (1) HORIZONTAL FLOOR EXTENSION
- (1) 3-DRAWER C-TECH CABINET
- (1) VERTICAL REAR WALL DIVIDER
- (1) STD DEPTH ADJ SLIDE OUT/TILT TRAY
- (1) CIRCUIT BREAKER PANEL
- (1) GENERATOR METER PANEL
- (1) NIGHT SCAN CONTROLLER
- (1) VERTICAL COMPARTMENT DIVIDER

COMPARTMENT D5 CONTAINS:
- (1) HORIZONTAL FLOOR EXTENSION
- (1) 1/2 DEPTH ADJ SLIDE OUT/TILT TRAY
- (1) VERTICAL REAR WALL DIVIDER
- (1) ELECTRIC CORD REEL WITH 200' OF 10/3 YELLOW CORD
- (1) GUSSETED SHELF FOR POWER UNIT
- (1) 30A,240V T.L. RECEPTACLE
- (1) HYDRAULIC REEL WITH 100' OF HOSE
- (1) 1/2 DEPTH FLOOR MTD SLIDE OUT TRAY
- (1) STD DEPTH FLOOR MTD SLIDE OUT TRAY

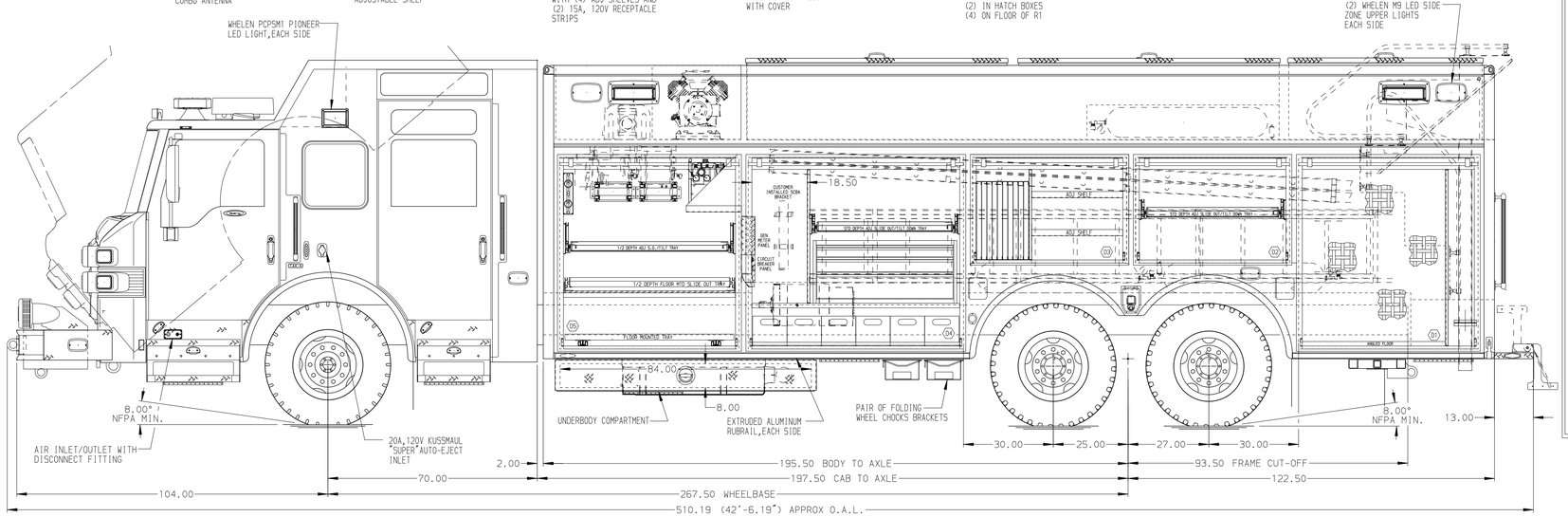

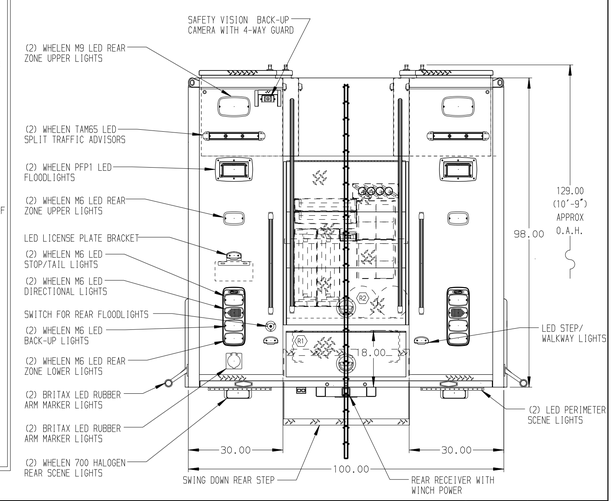

NOTE

DIMENSIONS SHOWN ARE APPROXIMATE AND ARE SUBJECT TO MINOR DEVIATIONS AS MAY OCCUR OR BE NECESSARY IN CONSTRUCTION.
MINOR DETAILS NOT SHOWN.

NOTES:
1. POLISHED S/S SCUFFPLATES ON CAB DOOR JAMBS
2. FLOOR IN CAB AND CREW CAB TO BE ALUMINUM TREADPLATE
3. DAVID CLARK 5 POSITION INTERCOM SYSTEM
4. IOTA 75 AMP CHARGER LOCATED BEHIND THE DRIVER'S SEAT
5. BATTERY CHARGE INDICATOR LOCATED ON DRIVER'S SEAT WITH BRACKET
6. PULL STRAPS ON ALL BODY ROLL-UP DOORS
7. S/S GUARDS ON ALL BODY ROLL-UP DOORS
8. AMDOR LED STRIP LIGHTS IN ALL BODY AND HATCH COMPARTMENTS
9. ONAN 30kW SINGLE PHASE PTO DRIVEN GENERATOR WITH SPLASH GUARD LOCATED BETWEEN THE FRAME RAILS

TAK-4 T-3 REAR SUSPENSION

SIDE ROLL AND FRONTAL IMPACT PROTECTION

CLEAR DOOR WIDTH KEY

AMDOR ROLL UP DOORS:	-2 1/4"
GORTITE ROLL UP DOORS:	-2 1/2"
PIERCE DOUBLE LAP DOORS:	-4 1/4"
PIERCE LIFT-UP LAP DOORS:	-1 1/2"

(EX: 60"F-F - 2 1/4"= 57 3/4" CLEAR)
(F-F)= FRAME TO FRAME

REV	DATE	BY	CH
1	04MAY18	ALZ	AZU
2	06FEB18	DHE	AZU

CHASSIS DATA
MAKE: PIERCE
MODEL: VXFR7020
DWG NO.

Pierce MANUFACTURING INC.

TITLE: HEAVY DUTY RESCUE NON-WALKIN
FOR: HENRICO COUNTY HENRICO,VA

32024AD

JOB NO.	32024
SCALE	1:24
DATE	
DRAWN BY	DHE 17JAN18
CHECKED BY	CDK 19JAN18
SHEET SIZE	D
SHEET NO.	1 OF 1

View File Created 04-MAY-2018 13:02:17