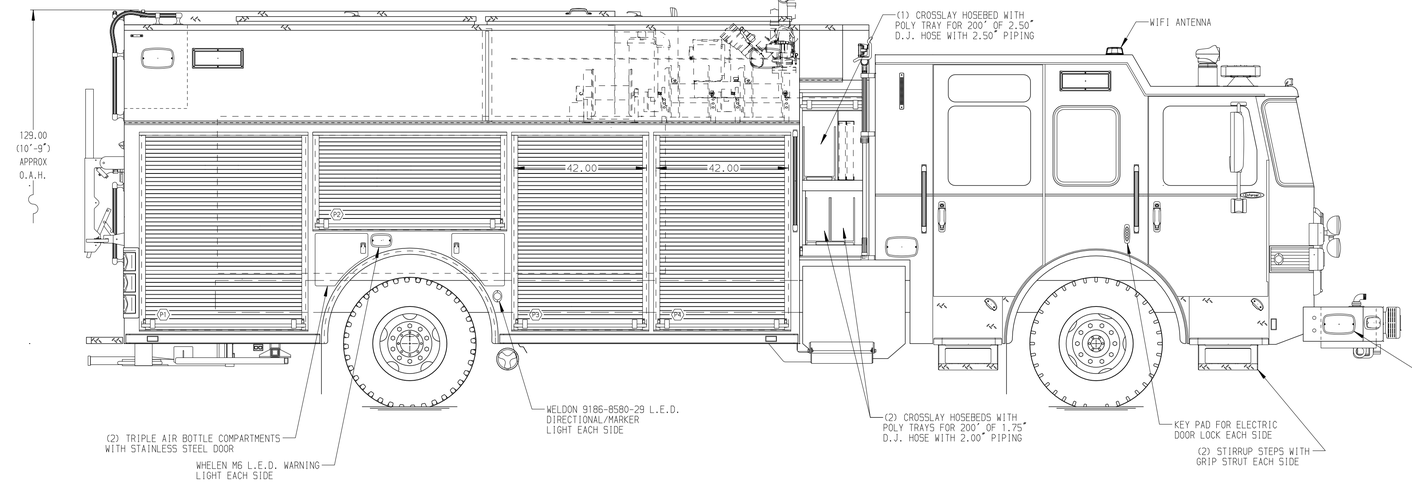

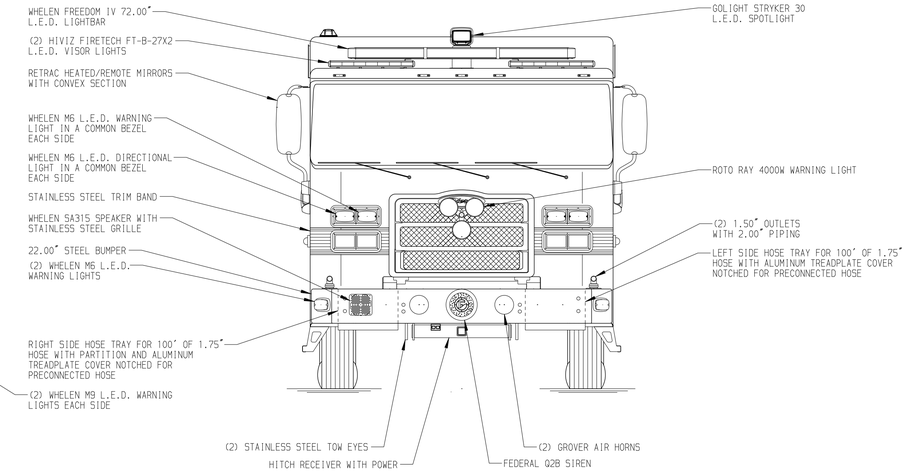

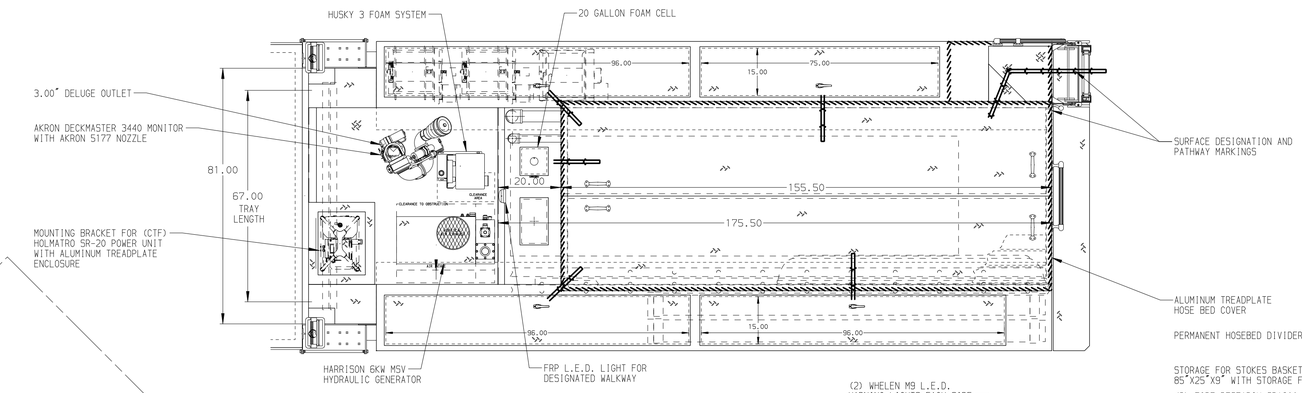

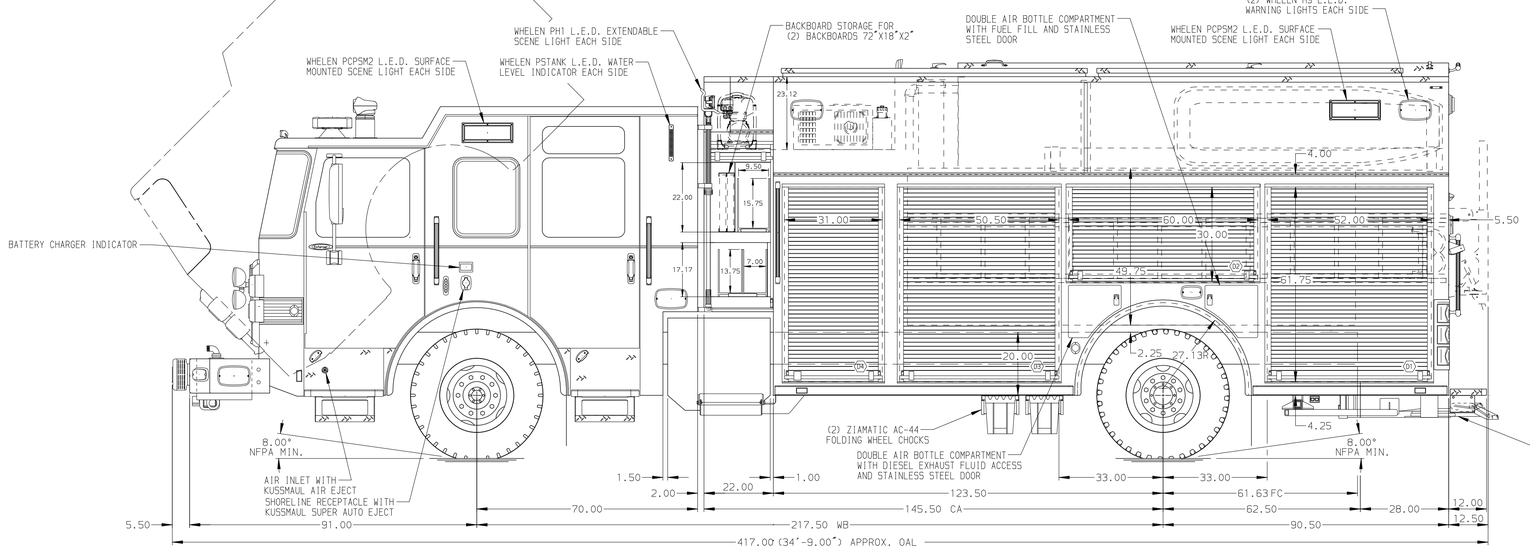

HOSEBED CAPACITIES

1. 400' OF 3.00" HOSE
2. 1000' OF 5.00" HOSE
3. 200' OF 1.75" PRECONNECTED HOSE
4. 200' OF 3.00" PRECONNECTED HOSE

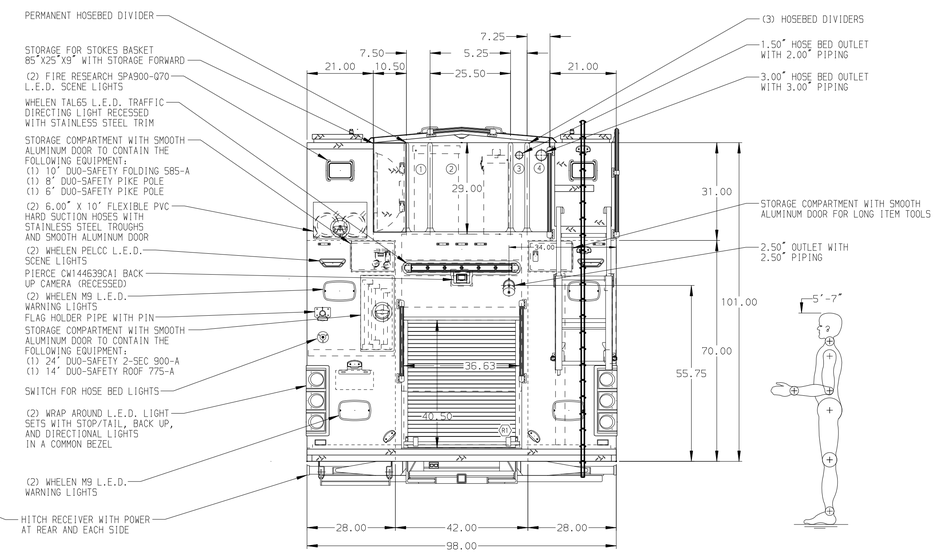

ALUMINUM BODY

NOTE

DIMENSIONS SHOWN ARE APPROXIMATE AND ARE SUBJECT TO MINOR DEVIATIONS AS MAY OCCUR OR BE NECESSARY IN CONSTRUCTION.
MINOR DETAILS NOT SHOWN.

1. ONE AKRON ERWC-15-10 4-WIRE ELECTRIC REWIND CORD REEL WITH 200' OF 10/4 CABLE IN HATCH COMPARTMENT ABOVE P3
2. TWO HANNAY EF2220-17-1B ELECTRIC REWIND HYDRAULIC REELS WITH 100' OF HOSE IN HATCH COMPARTMENT ABOVE P4
3. AIR OUTLET WITH SHUT OFF VALVE LOCATED IN COMPARTMENT-P4
4. BATTERY CHARGER LOCATED BEHIND DRIVER SEAT
5. ONE FULL WIDTH/DEPTH ADJUSTABLE SHELF WITH SIDES IN COMPARTMENT-D1,P4,R1;TWO IN P3; THREE IN P1
6. ONE ADJUSTABLE SLIDE-OUT TRAY WITH SIDES IN COMPARTMENT-D3,P4
7. ONE FULL FLOOR MOUNTED SLIDE-OUT TRAY WITH SIDES IN COMPARTMENT-D1,P3,P4;TWO IN P1
8. ONE SWING-OUT TOOLBOARD WITH PEGBOARD PATTERN IN COMPARTMENT-D3,P2
9. ONE POLY TOOL BOX IN COMPARTMENT-P3
10. ONE HORIZONTALLY MOUNTED PARTITION IN COMPARTMENT-D3
11. CIRCUIT BREAKER PANEL IN COMPARTMENT-D3
12. ONE DUPLEX RECEPTACLE IN COMPARTMENT-D1,P1,P3
13. ONE VERTICAL BOLT-IN PARTITION BETWEEN COMPARTMENTS D1/R1 AND P1/R1
14. ONE SPECIAL HEIGHT VERTICAL PARTITION IN COMPARTMENT-D3,P1
15. ONE VERTICAL PARTITION IN COMPARTMENT-P3
16. HORIZONTAL EQUIPMENT MOUNTING TRACKS IN COMPARTMENT-D2
17. VERTICAL EQUIPMENT MOUNTING TRACKS IN COMPARTMENT-D3,P1,P3
18. ONE TWIST LOCK RECEPTACLE IN POWER UNIT ENCLOSURE

REV	DATE	BY	CH
1	30MAR18	BST	MSA
2	06MAR18	BST	MSA

CHASSIS DATA
MAKE: PIERCE
MODEL: ENFORCER

Pierce MANUFACTURING INC.

TITLE: 1500-D-1000P;980 GAL. WATER/20 GAL. FOAM CELL,DELUGE 214" PUC RESCUE BODY,LADDERS THRU BODY,GENERATOR
FOR: UMATILLA RURAL FIRE PROTECTION DISTRICT #7-405 UMATILLA, OR
DWG NO.: 32031AD

JOB NO.	32031
SCALE 1:24	DATE
DRAWN BY BST	11JAN18
CHECKED BY AJA	12JAN18
SHEET SIZE D	SHEET NO. 1 OF 1

View File Created 06-APR-2018 08:10:40