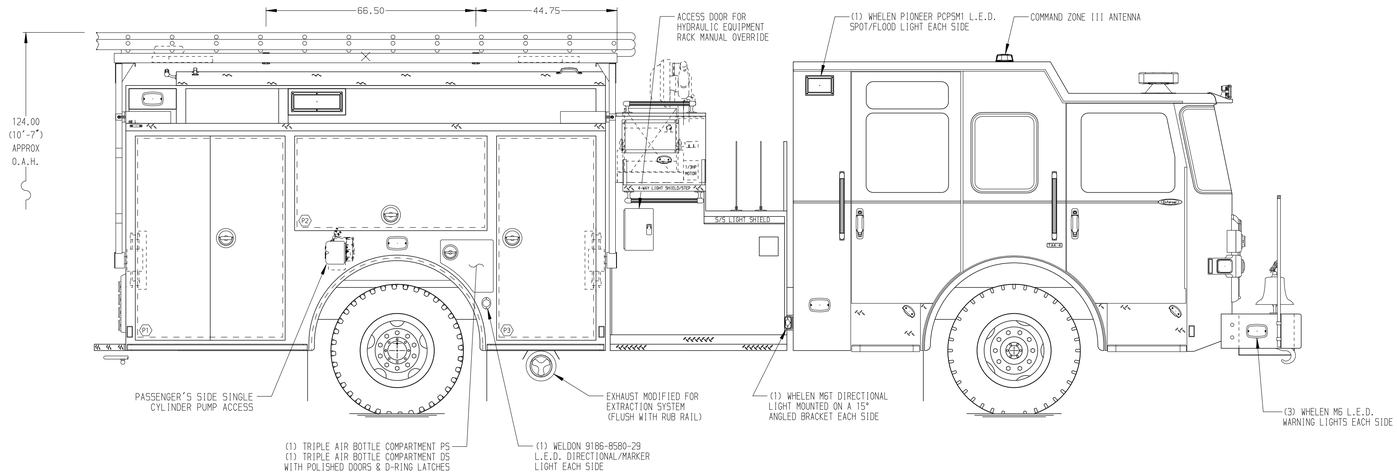

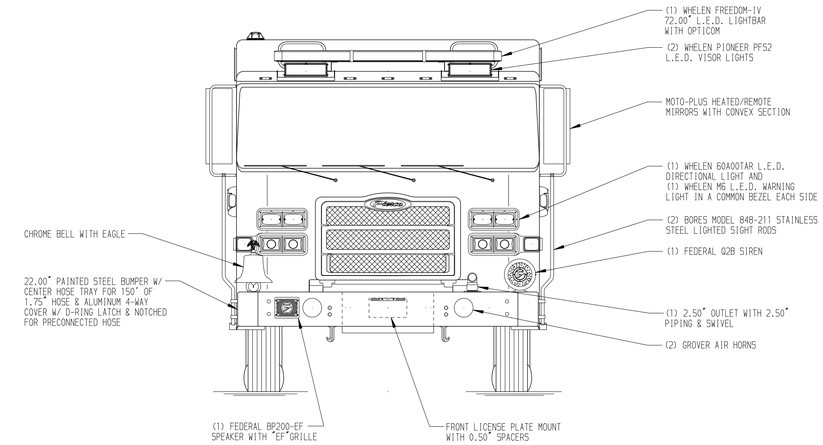

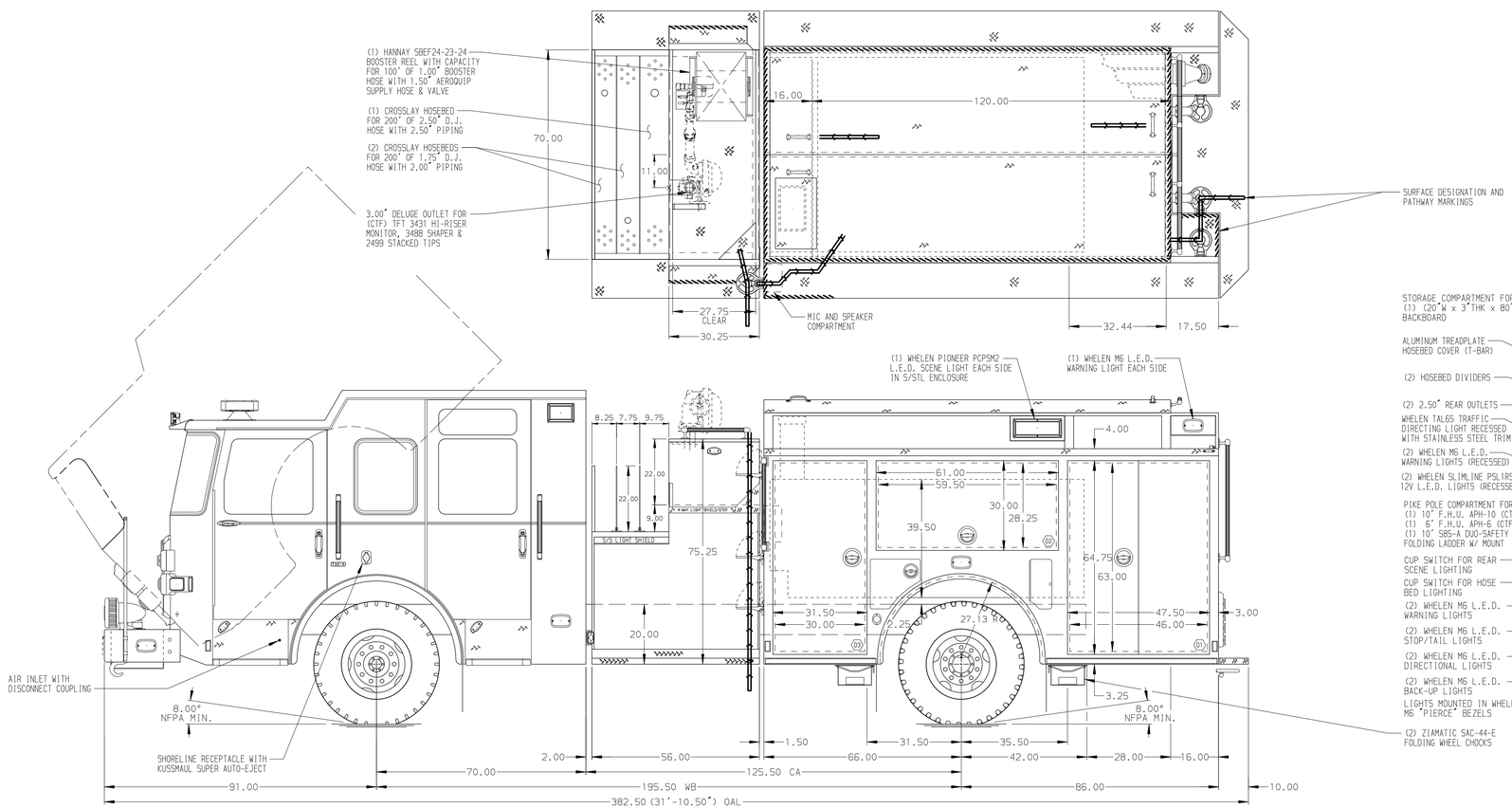

HOSEBED CAPACITIES

1. -1000' OF 4.00" L.D. HOSE
2. - 600' OF 2.50" D.J. HOSE
3. - 600' OF 1.75" D.J. HOSE

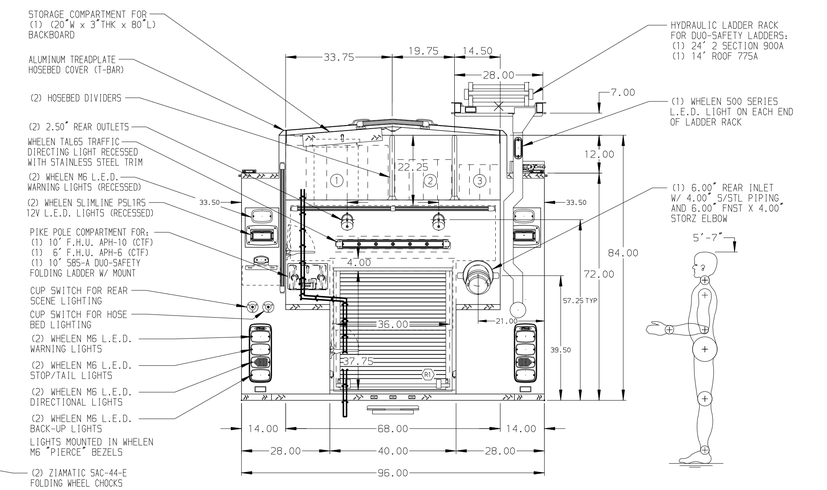

STAINLESS STEEL BODY

SIDE ROLL AND FRONTAL IMPACT PROTECTION

NOTE

DIMENSIONS SHOWN ARE APPROXIMATE AND ARE SUBJECT TO MINOR DEVIATIONS AS MAY OCCUR OR BE NECESSARY IN CONSTRUCTION.
MINOR DETAILS NOT SHOWN.

1. ONSPOT AUTOMATIC TIRE CHAINS TO BE PROVIDED AT REAR
2. ALUMINUM 4-WAY TO BE INSTALLED ON CAB ROOF
3. BATTERY CHARGER INDICATOR INSTALLED ON DRIVER'S SEAT RISER
4. BATTERY CHARGER LOCATED BEHIND DRIVER'S SEAT
5. PULL STRAP ON DOOR IN COMPARTMENTS D2 & P2
6. THREE FULL WIDTH/DEPTH ADJ SHELVES IN D1 & D3, TWO IN P1, ONE IN P3 & R1
7. ONE FLOOR MOUNTED SLIDE-OUT TRAY IN COMPARTMENT R1
8. ONE PAC TRAC ON THE REAR WALL & FLOOR OF COMPARTMENT D2
9. PARTITION BETWEEN COMPARTMENTS D1/R1 AND P1/R1
10. AMDOR AY-9500-020 L.E.D. LIGHT STRIP IN CARGO AREA AND ON HOSEBED COVER

REV	DATE	BY	CH
3	10APR18	GVH	LAB
2	15MAR18	GVH	LAB
1	19JAN18	GVH	NPA

CHASSIS DATA
MAKE: PIERCE
MODEL: ENFORCER

Pierce MANUFACTURING INC.

TITLE: 1250-D-750P, 152" FH - FDLER BODY, 58" SIDE CONTROL (3) CROSSLAYS, DELUGE, BOOSTER REEL, HYD LDDR RACK

FOR: SAUGUS FIRE DEPARTMENT, SAUGUS, MASSACHUSETTS

DWG NO.: 32062AD

JOB NO.	32062
SCALE	1:24
DATE	
DRAWN BY	GVH 09JAN18
CHECKED BY	NPA 10JAN18
SHEET SIZE	D
SHEET NO.	1 OF 1

View File Created 12-APR-2018 11:49:31