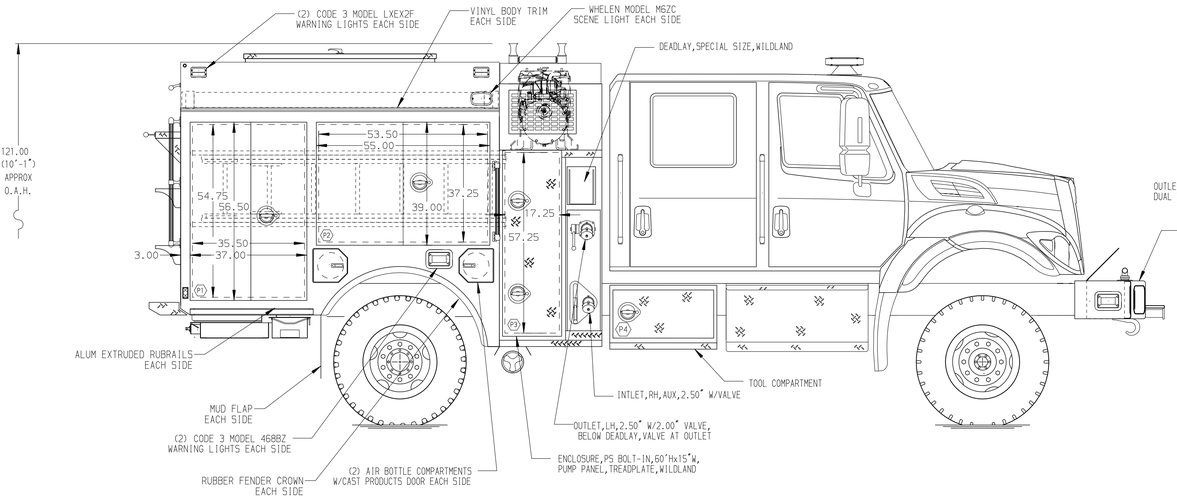

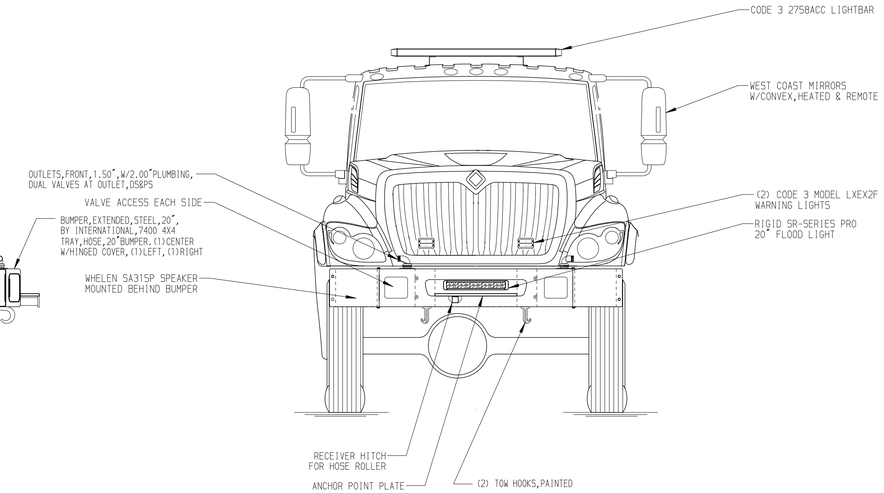

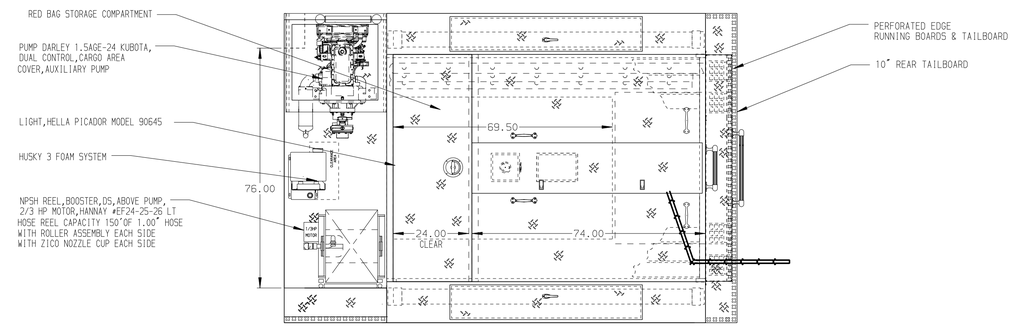

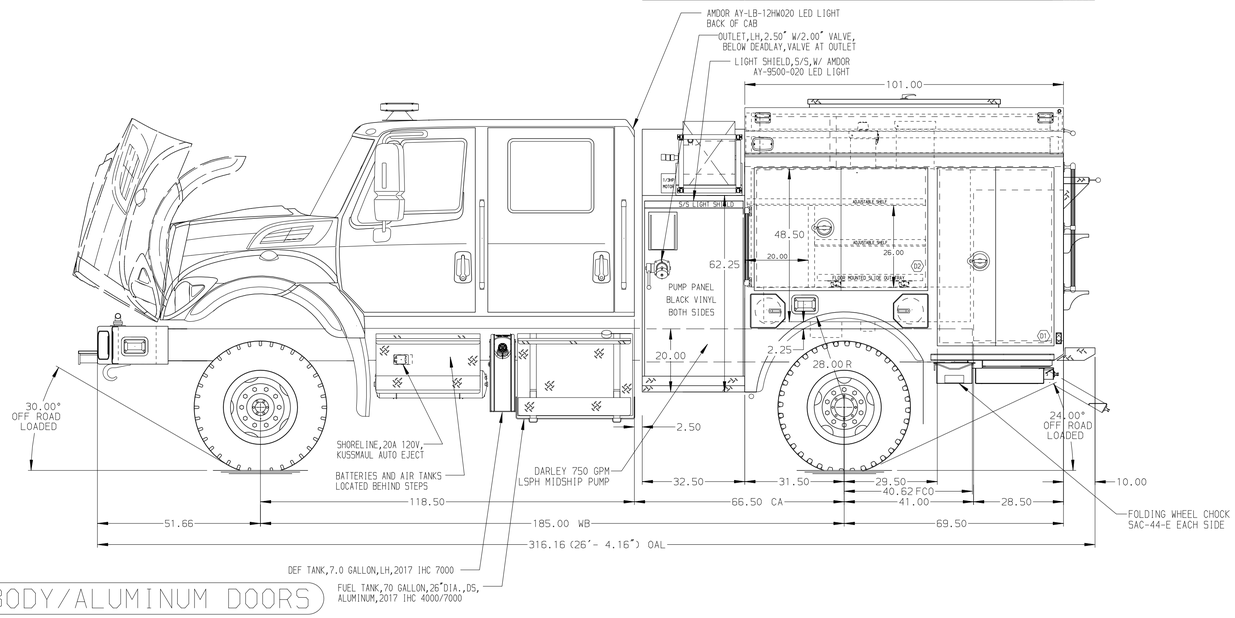

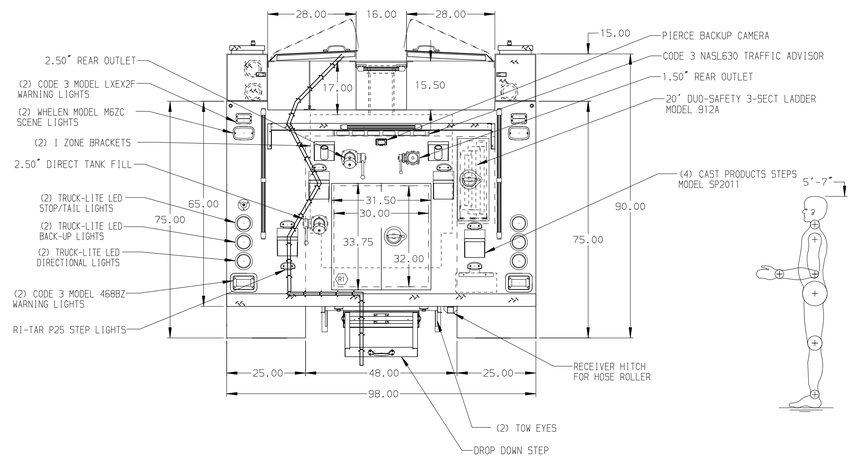

GALVANNEAL BODY/ALUMINUM DOORS

Pierce MANUFACTURING INC.

JOB NO.	32076
SCALE	1:24
DATE	
DRAWN BY	JBO
	08DEC17
CHECKED BY	DDA
	08DEC17
SHEET SIZE	D
SHEET NO.	1 OF 1

TITLE: 500-D-500 POLY,30 FOAM CELL,MODEL 34 RAISED REAR,REEL,DARLEY LSPH MIDSHIP PUMP

FOR: RIVERSIDE CITY FIRE DEPARTMENT, RIVERSIDE, CA

CHASSIS DATA: MAKE: IHC; MODEL: 7400 4 X 4

DWG NO.: 32076AD

REV	DATE	BY	CH
7	18APR18	JBO	DDA
6	28MAR18	JBO	DDA
5	01MAR18	JBO	DDA
4	23JAN18	JBO	DDA

NOTE

DIMENSIONS SHOWN ARE APPROXIMATE AND ARE SUBJECT TO MINOR DEVIATIONS AS MAY OCCUR OR BE NECESSARY IN CONSTRUCTION.
MINOR DETAILS NOT SHOWN.

1. AIR INLET/OUTLET WITH DISCONNECT FITTING LOCATED ON DRIVERS SIDE PUMP PANEL
2. EXHAUST SYSTEM,HORIZONTAL,RIGHT SIDE EXIT,7400 4X4,IHC,WILDLAND
3. BATTERY CHARGER LOCATED IN COMPARTMENT D2
4. BATTERY CHARGE INDICATOR LOCATED ON DRIVERS SEAT RISER
5. JUMPER STUDS,LOCATION UNDER PS CAB
6. PERIMETER SCENE LIGHTS LOCATED PER SHOP ORDER
7. DARLEY LSPH 750 GPM MIDSHIP PUMP
8. KEYED LOCKS FOR LATCHES,LAP DOORS,KEY STYLE 1250
9. PIERCE L.E.D. COMPARTMENT DUAL LIGHT STRIPS LOCATED IN ALL COMPARTMENTS
10. SHELF TRACKS LOCATED IN COMPARTMNENTS D1, D2, P1, P2 & R1
11. FLOOR MOUNTED SLIDE-OUT TRAY IN COMPARTMENT D2
12. ONE FULL WIDTH/DEPTH ADJUSTABLE SHELF IN EACH COMPARTMENT P2 & R1
13. TWO FULL WIDTH/DEPTH ADJUSTABLE SHELVES IN EACH COMPARTMENT D1, D2 & P1
14. ONE VERTICAL PARTITION LOCATED IN COMPARTMENT D2
-
-

View File Created 18-APR-2018 07:33:49