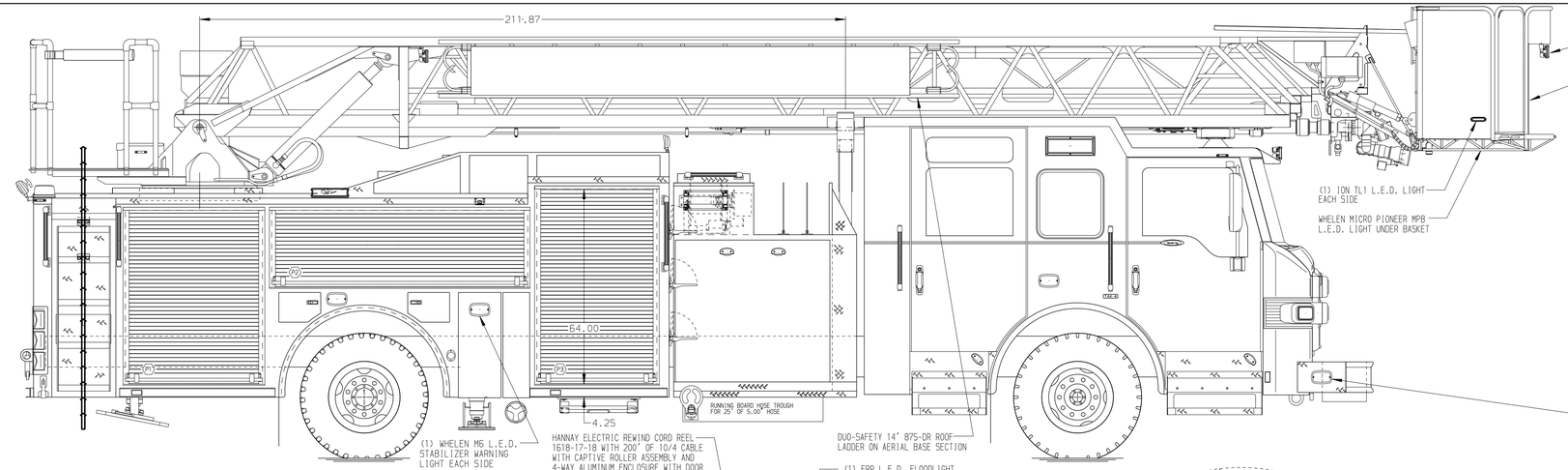

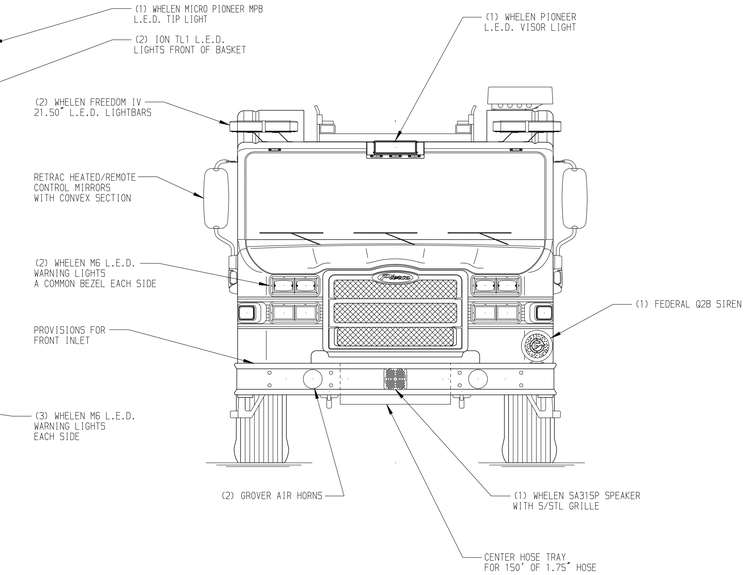

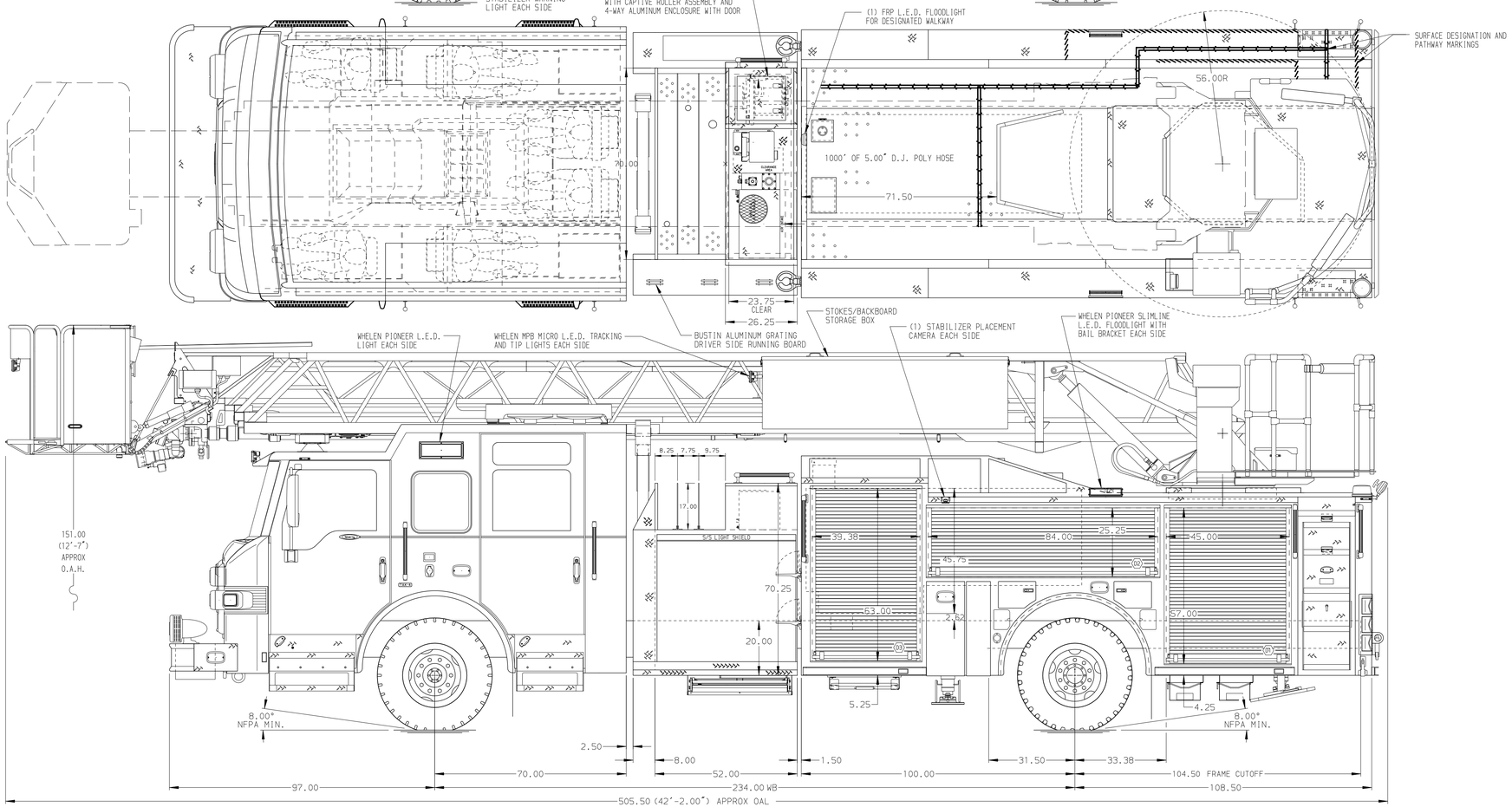

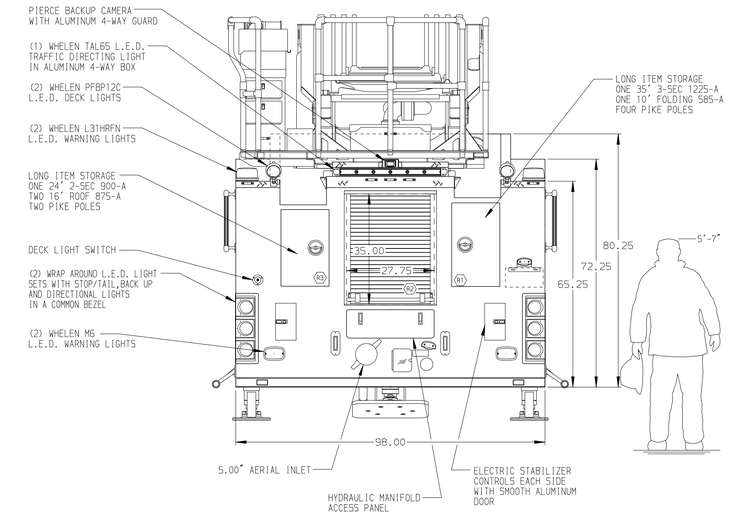

BODY	WATER TANK
107' ASL Aluminum Body	500 Gallon Poly Water Tank
COMPT,DRIVER SIDE FRONT	Foam System
Full Height Rollup Forward	Husky 3 Single Agent Foam System
COMPT,DRIVER SIDE REAR	Foam Cell
Full Height Rollup Rearward	20 Gallon Foam Cell, Non-Reduced Water
COMPT,PASSENGER SIDE FRONT	
Full Height Rollup Forward	
COMPT,PASSENGER SIDE REAR	
Full Height Rollup Rearward	

CHASSIS	CAB	AXLE,FRONT,CUSTOM	TRANSMISSION	PUMPHOUSE	CROSSLAYS,1.50"	SPEEDLAYS	SAFETY
Velocity Chassis	7010 Notched Velocity FR Cab	24,000 Lb TAK-4 Axle	ALlison 5th Gen, 4500 EVS P	52" Control Zone Side Mount	(2) 1.50" Standard Capacity	Speedlays Not Required	Side Roll and Frontal Impact Protection
ENGINE	BUMPER	AXLE,REAR		PUMP	CROSSLAYS,2.50"	GENERATOR	
525 HP DD13 Engine	19" Extended Stainless Steel	33,500 Lb Meritor Axle		2000 GPM Waterous CSU	(1) 2.50" Standard Capacity	Harrison 6kW MSV Hydraulic	

CUSTOMER APPROVAL

APPROVED BY: _____

DATE: _____

Pierce MANUFACTURING INC.

NOTE

DIMENSIONS SHOWN ARE APPROXIMATE AND ARE SUBJECT TO MINOR DEVIATIONS AS MAY OCCUR OR BE NECESSARY IN CONSTRUCTION.
MINOR DETAILS NOT SHOWN.

1. ONE 1.50 OUTLET WITH 2.00 PIPING AND SWIVEL LOCATED IN CENTER BUMPER TRAY
2. SHORELINE RECEPTACLE WITH KUSSMAUL SUPER AUTO-EJECT LOCATED ON DRIVER SIDE OF THE CAB
3. AIR INLET WITH DISCONNECT COUPLING IN THE DRIVER SIDE STEPWELL
4. BATTERY CHARGER LOCATED BEHIND DRIVER'S SEAT
5. BATTERY CHARGE INDICATOR LOCATED ON DRIVER SIDE OF THE CAB
6. SIX ADJUSTABLE SHELVES IN COMPARTMENTS PER SHOP ORDER
7. FOUR FLOOR MOUNTED SLIDE-OUT TRAYS IN COMPARTMENTS PER SHOP ORDER
8. CIRCUIT BREAKER PANEL IN COMPARTMENT PER SHOP ORDER
9. NON-RAISED AERIAL PEDESTAL
10. 1250 GPM HIGH FLOW WATERWAY

REV	DATE	BY	CH
-	-	-	-

CHASSIS DATA

MAKE: PIERCE

MODEL: VELOCITY

TITLE: 110' ASCENDANT AERIAL PLATFORM AND BODY ASSEMBLY
–

FOR: PIERCE FIELD UNIT
APPLETON, WISCONSIN

DWG NO. 32152AD

JOB NO.	32152
SCALE 1:24	DATE
DRAWN BY TKA	01DEC17
CHECKED BY THS	01DEC17
SHEET SIZE D	SHEET NO. 1 OF 1

View File Created 04-DEC-2017 07:29:08