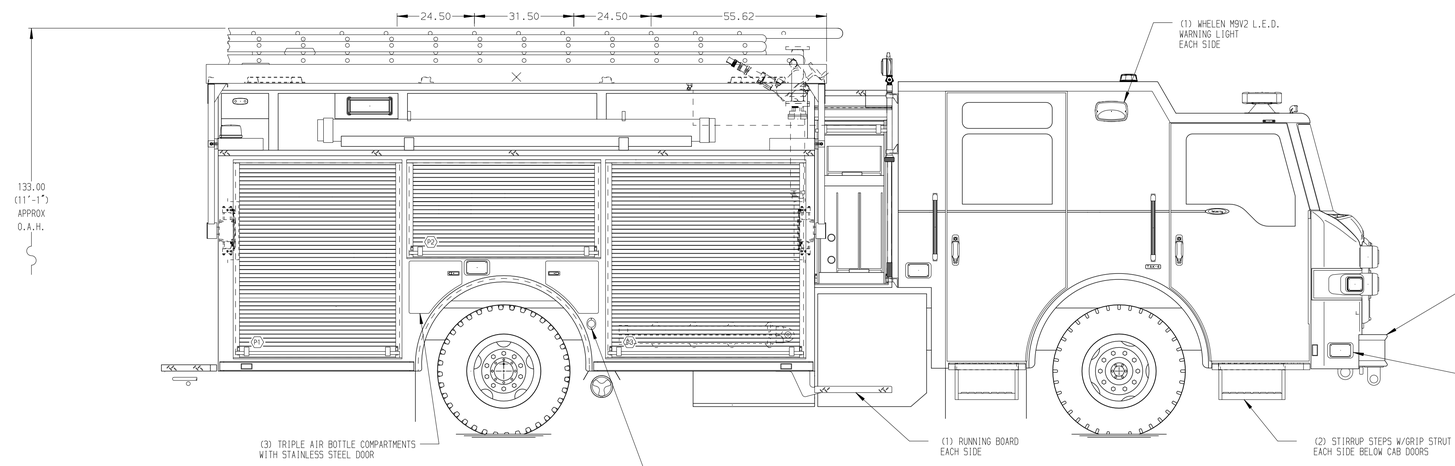

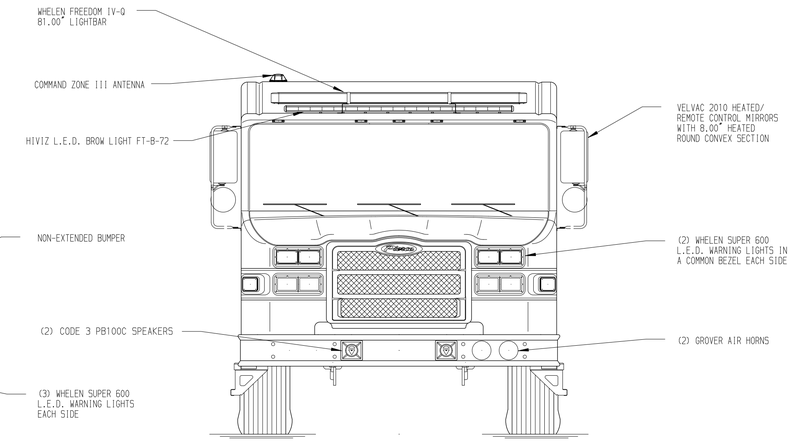

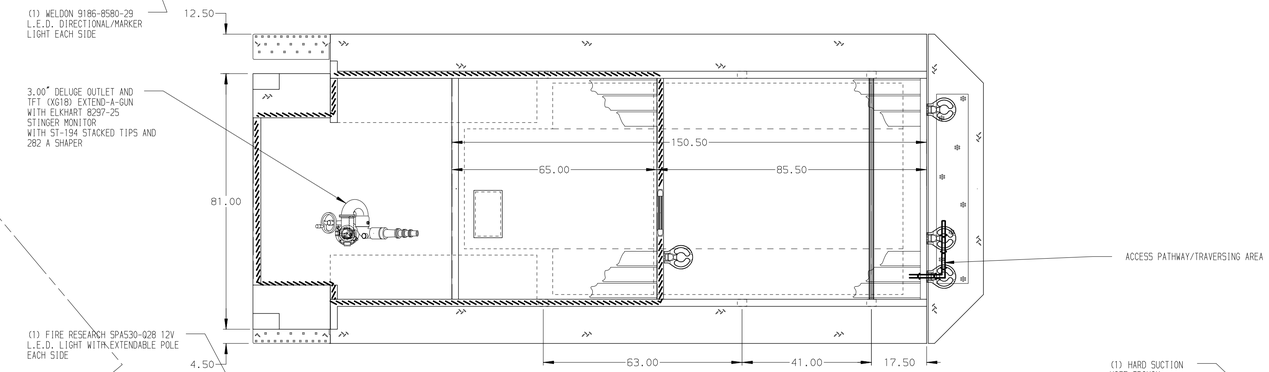

HOSEBED CAPACITIES

1. 600' OF 5.00" D.J. POLY HOSE
2. 800' OF 2.50" D.J. POLY HOSE
3. 800' OF 2.50" D.J. POLY HOSE
4. OPEN BED

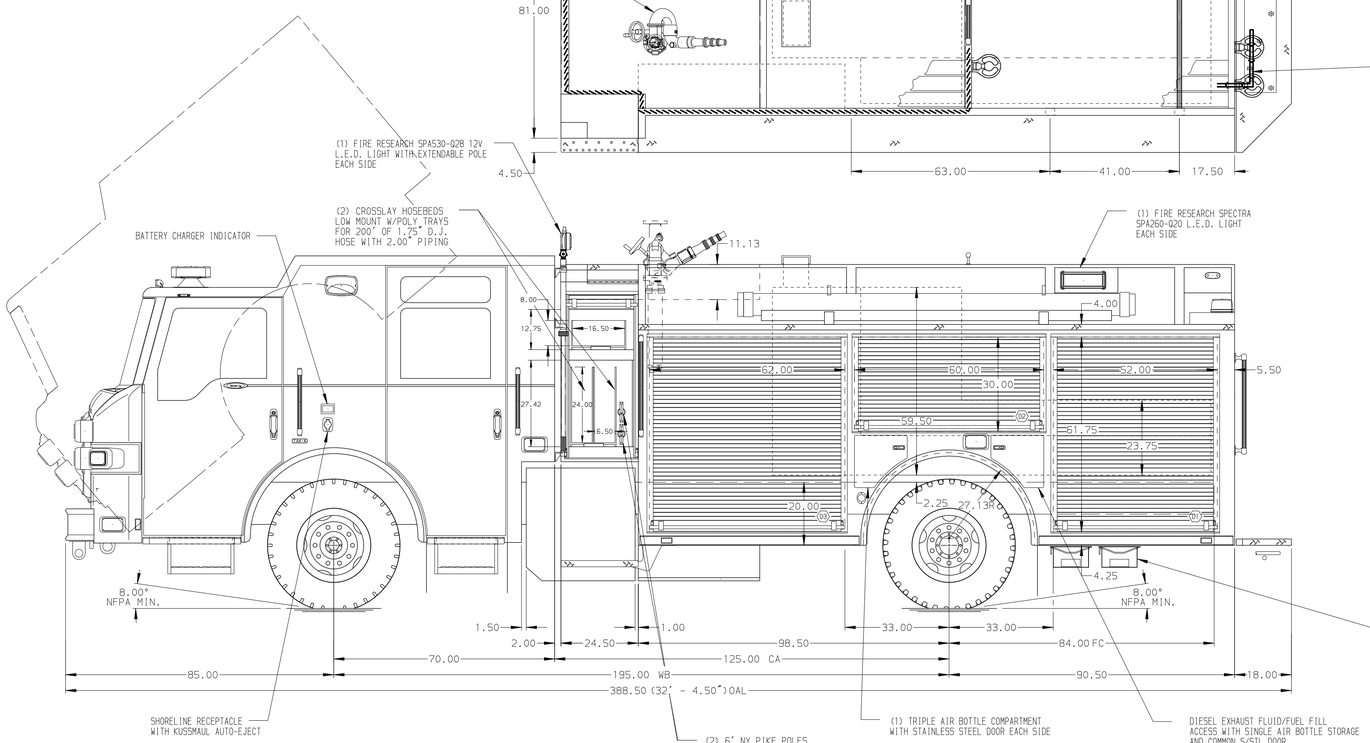

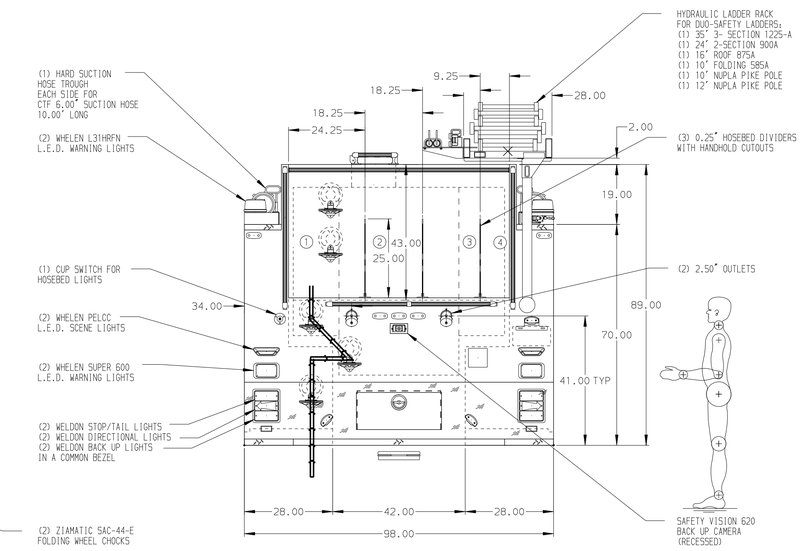

ALUMINUM BODY

MAXIMUM O.A.H. 134"

NOTE

DIMENSIONS SHOWN ARE APPROXIMATE AND ARE SUBJECT TO MINOR DEVIATIONS AS MAY OCCUR OR BE NECESSARY IN CONSTRUCTION.
MINOR DETAILS NOT SHOWN.

1. BATTERY CHARGER LOCATED IN COMPARTMENT D3
2. DUAL L.E.D. LIGHT STRIPS LOCATED IN HOSE BED
4. ONE ADJUSTABLE TILTING SLIDE-OUT TRAY IN COMPARTMENT P3
5. ONE FLOOR MOUNTED SLIDE-OUT TRAY IN COMPARTMENT D1 & P1
6. ONE ALUMINUM SLIDE OUT TOOLBOARD IN COMPARTMENT D3
7. AIR BOTTLE HOLDER IN COMPARTMENT P3
8. ALL FOLDING STEPS TO BE TRIDENT WITH INTEGRATED L.E.D. LIGHT UNLESS SPECIFIED
9. ONE FULL WIDTH/DEPTH ADJUSTABLE SHELF LOCATED IN COMPARTMENT D1 TWO IN P1 & P3

REV	DATE	BY	CH
3	08MAY18	MMF	MSA
2	20APR18	MMF	MSA
1	16FEB18	MMF	NPE

CHASSIS DATA
MAKE: PIERCE
MODEL: VELOCITY

Pierce MANUFACTURING INC.

TITLE: 1500-D-1000P 189" PUMPER PUC BODY, 67" LOW HOSEBED (2)CROSSLAYS, DELUGE, HYDRAULIC LADDER RACK PS
FOR: VALDEZ FIRE DEPARTMENT, VALDEZ, ALASKA
DWG NO.: 32154AD

JOB NO.	32154
SCALE	1:24
DATE	
DRAWN BY	MMF
DATE	08FEB18
CHECKED BY	NPE
DATE	08FEB18
SHEET SIZE	D
SHEET NO.	1 OF 1

View File Created 09-MAY-2018 06:51:17