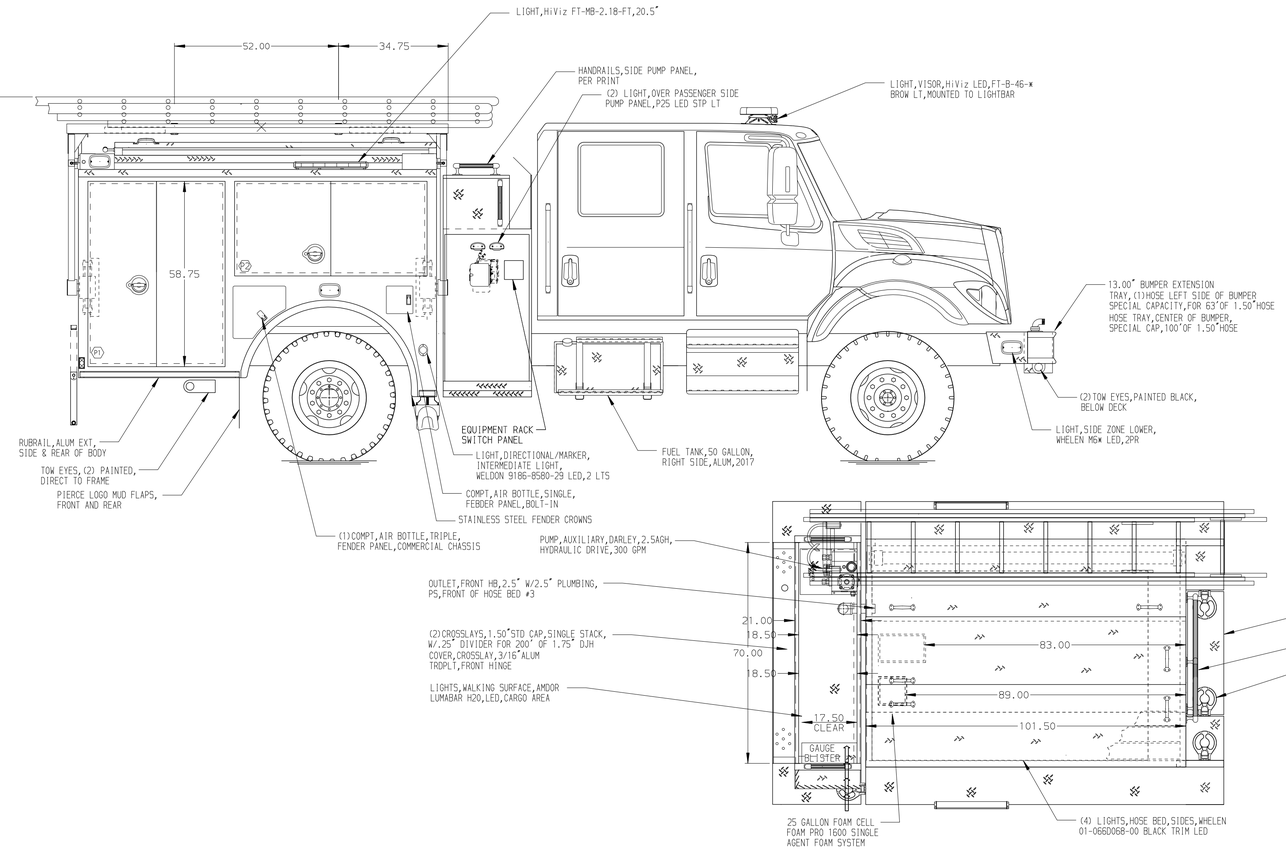

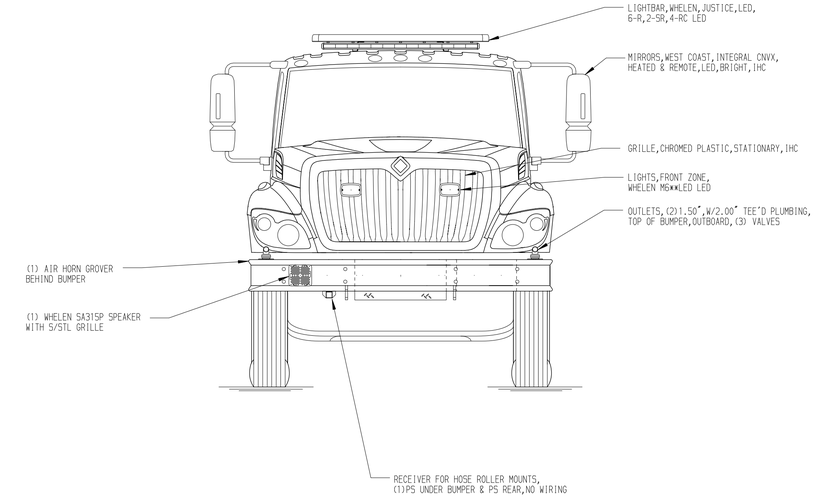

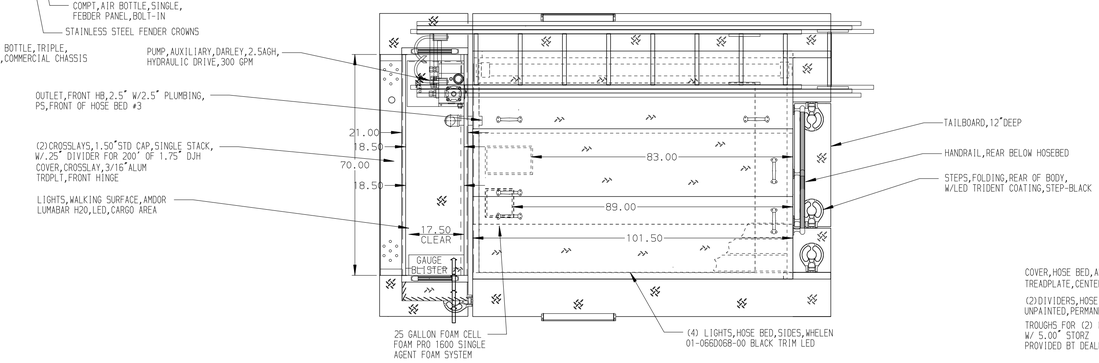

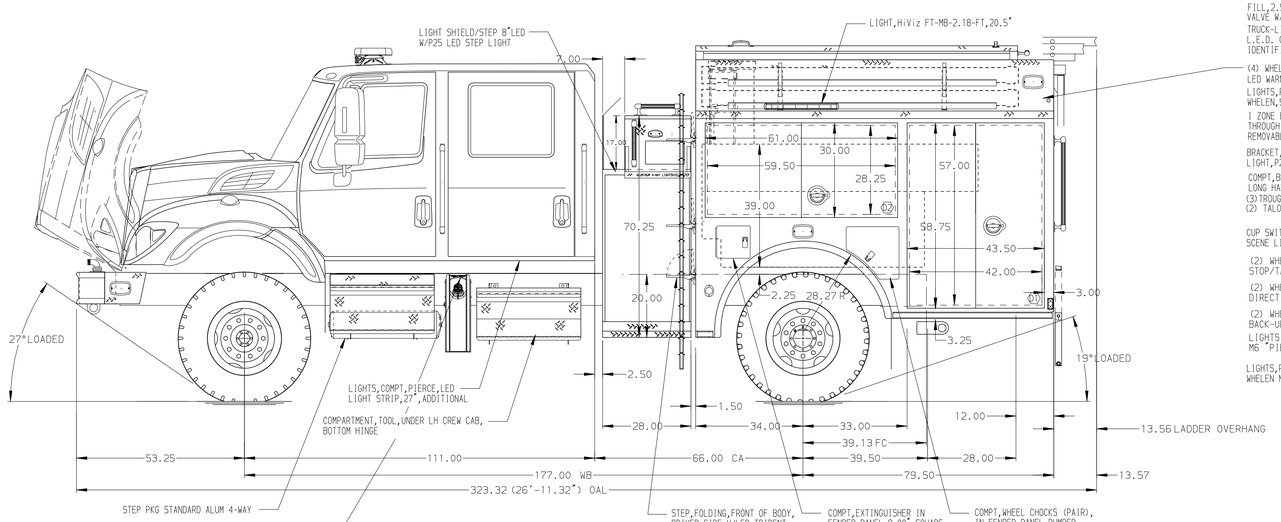

HOSEBED CAPACITIES

1. 200' OF 1.75" D.J. POLYESTER HOSE
2. 1000' OF 3.00" D.J. POLYESTER HOSE
3. 250' OF 2.50" D.J. POLYESTER HOSE
4. 200' OF 1.75" D.J. POLYESTER HOSE

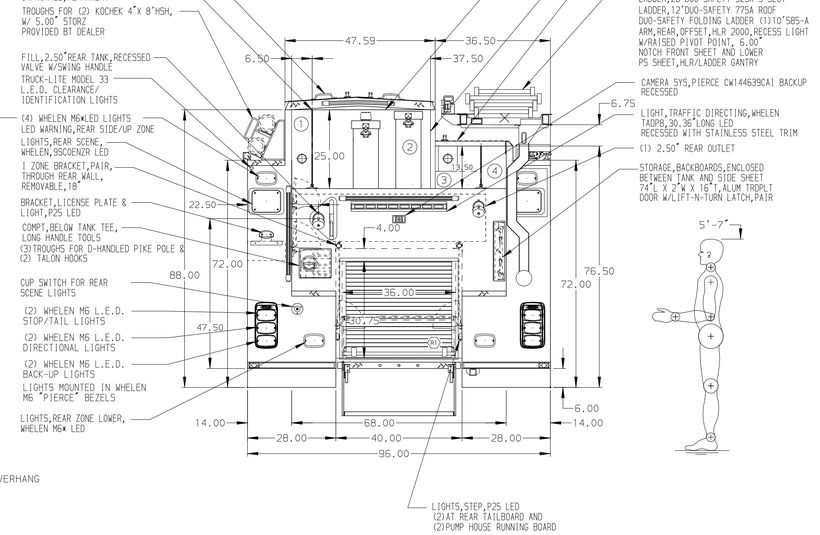

ALUMINUM BODY

MAXIMUM O.A.L. 323.32"

MAXIMUM O.A.H. 116"

NOTE

DIMENSIONS SHOWN ARE APPROXIMATE AND ARE SUBJECT TO MINOR DEVIATIONS AS MAY OCCUR OR BE NECESSARY IN CONSTRUCTION.
MINOR DETAILS NOT SHOWN.

REV	DATE	BY	CH
1	19APR18	RWI	NAS
0	22FEB18	RWI	JAF

CHASSIS DATA	
MAKE	IHC
MODEL	7400

Pierce MANUFACTURING INC.
BRADENTON, FLORIDA

TITLE	1000-D-500 POLY,25 FOAM,114"BODY DS&PS FULL HGT 28"SIDE CONTROL,(2)1.5"CROSSLAYS,6"RAISED REAR
FOR	NAPA COUNTY FIRE DEPARTMENT SAINT HELENA,CALIFORNIA
DWG NO.	32198AD

JOB NO.	32198
SCALE	1:24
DATE	
DRAWN BY	JLA 20JAN18
CHECKED BY	RWI 23JAN18
SHEET SIZE	D
SHEET NO.	1 OF 1

View File Created 19-APR-2018 11:14:15