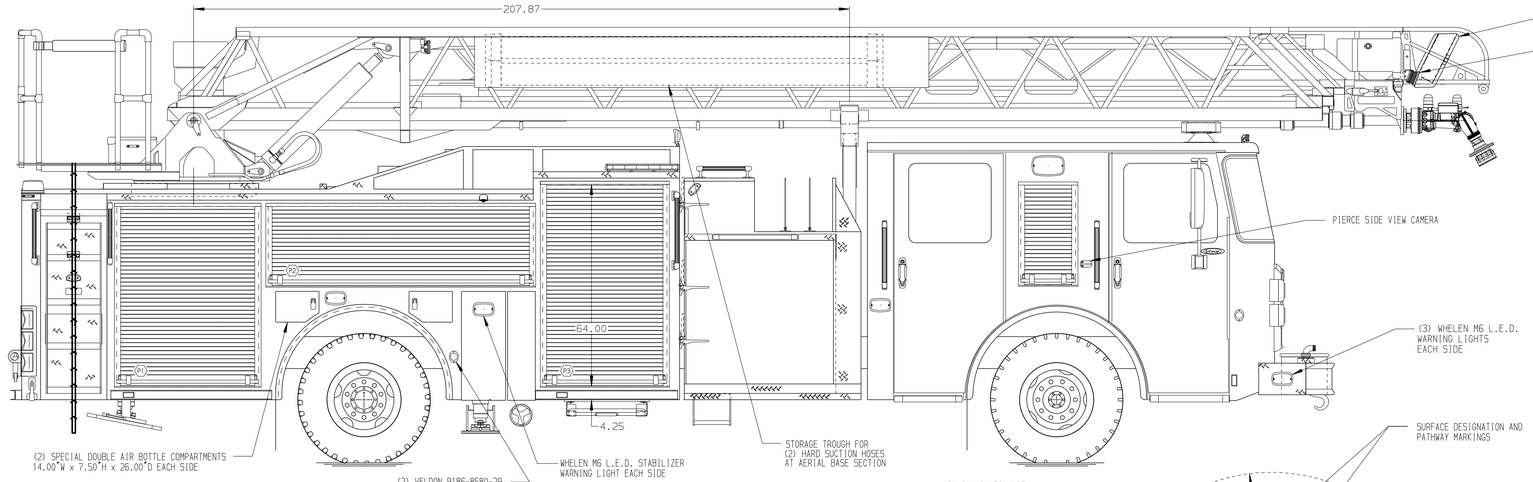

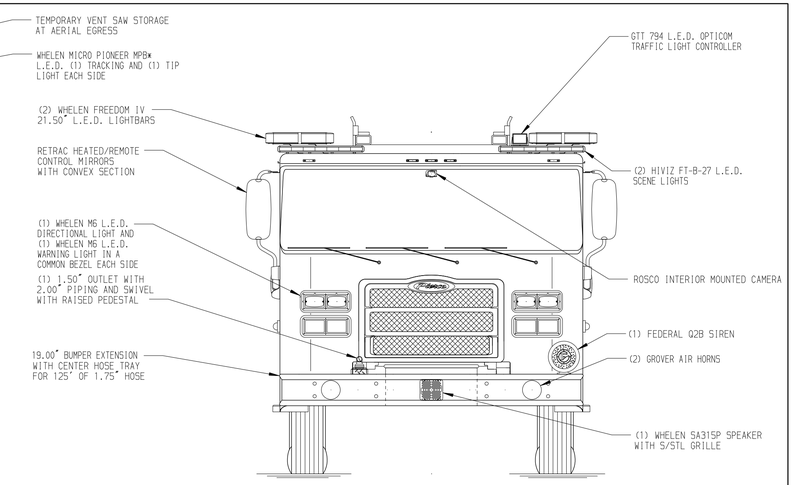

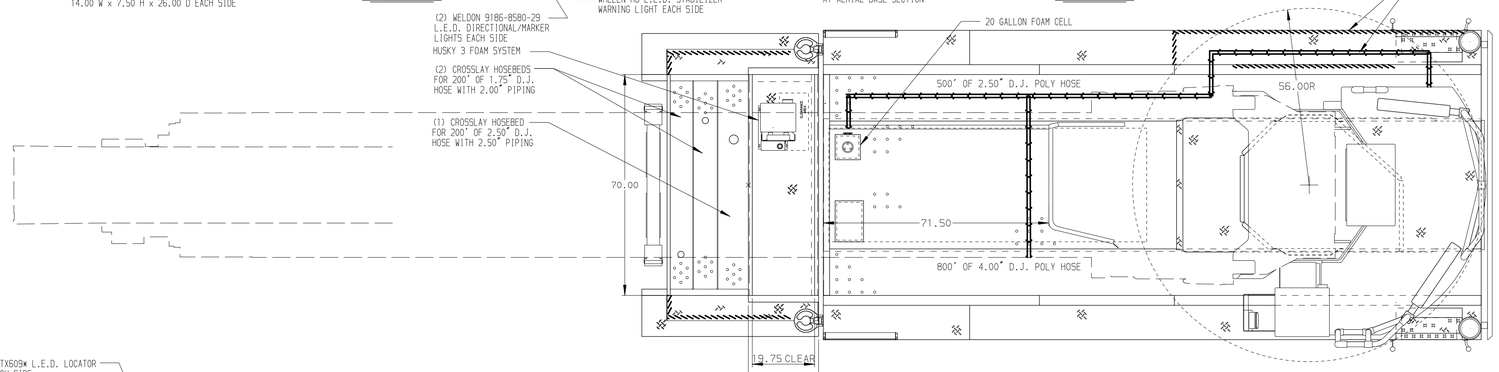

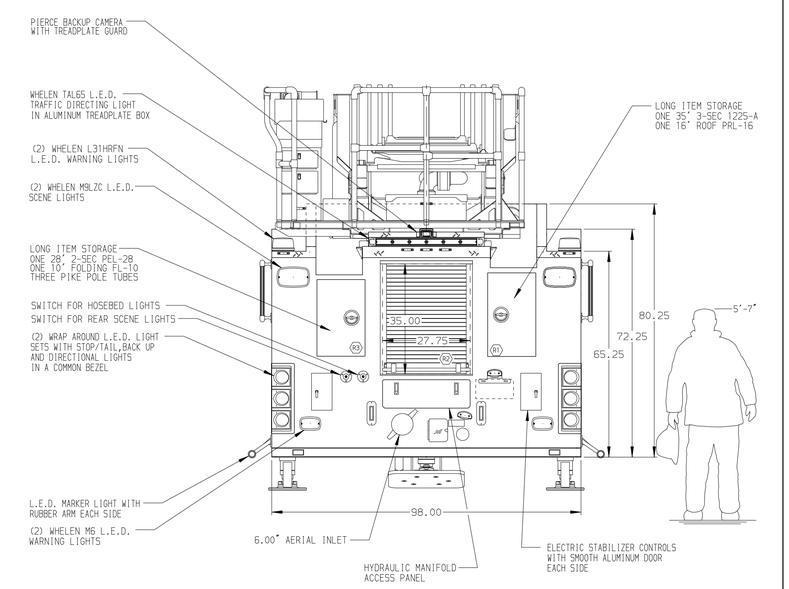

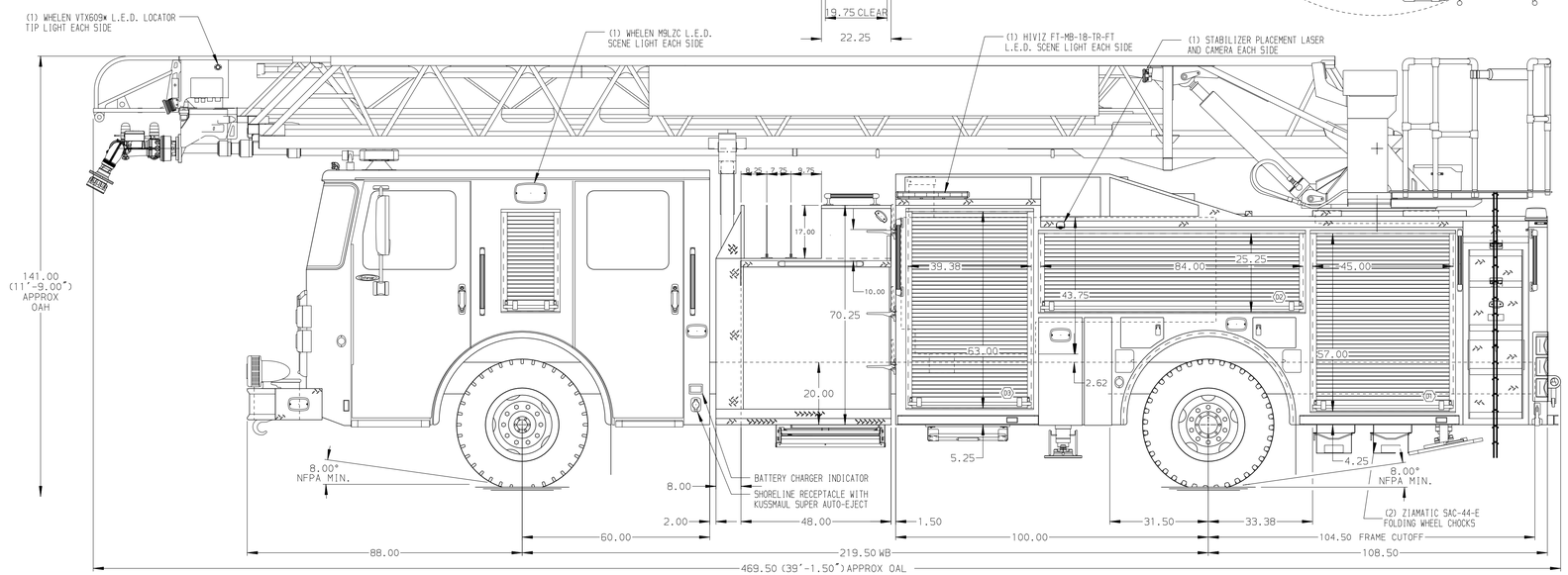

ALUMINUM BODY

SIDE ROLL AND FRONTAL IMPACT PROTECTION

NOTE

DIMENSIONS SHOWN ARE APPROXIMATE AND ARE SUBJECT TO MINOR DEVIATIONS AS MAY OCCUR OR BE NECESSARY IN CONSTRUCTION.
MINOR DETAILS NOT SHOWN.

1. ONSPOT AUTOMATIC TIRE CHAINS TO BE PROVIDED AT REAR
2. BATTERY CHARGER LOCATED BEHIND DRIVER'S SEAT
3. ONE 6-PLACE RECEPTACLE STRIP LOCATED IN COMPARTMENT R-2
4. TRIDENT FOLDING STEPS ON AERIAL DEVICE
5. REMOTE LADDER CONTROLS AT AERIAL TIP
6. L.E.D. LIGHTING ON AERIAL LADDER SECTIONS
7. ONE SWING-OUT TOOLBOARD LOCATED IN COMPARTMENT D2
8. 2-WAY INTERCOM SYSTEM BETWEEN AERIAL TIP AND TURNTABLE
9. LIFTING EYE ROPE RESCUE ATTACHMENT AT AERIAL TIP
10. 1500 GPM HIGH FLOW WATERWAY
11. AIR INLET WITH DISCONNECT COUPLING AT DRIVER'S SIDE STEPWELL
12. TWO FULL WIDTH/DEPTH ADJUSTABLE SHELVES LOCATED IN COMPARTMENTS D1,D3,P1,P3,(ONE IN P2,R2)
13. ONE SLIDE-OUT ADJUSTABLE TRAY LOCATED IN COMPARTMENTS D3,P1,P3
14. ONE FLOOR MOUNTED SLID-OUT TRAY LOCATED IN COMPARTMENTS D1,D3,P1,P3

REV	DATE	BY	CH
7	10MAY18	MWA	JGO
6	11APR18	LWE	JGO

CHASSIS DATA
MAKE: PIERCE
MODEL: ENFORCER

Pierce MANUFACTURING INC.

TITLE: 107' ASCENDANT AERIAL LADDER AND BODY ASSEMBLEY
500 GALLON TANK, 480 GAL WATER, 20 GAL FOAM

FOR: FRANKLIN COUNTY PUBLIC SAFETY
ROCKY MOUNT, VIRGINIA

DWG NO.: 32205AD

JOB NO.	32205
SCALE	1:24
DATE	
DRAWN BY	MWA 05FEB18
CHECKED BY	CRI 05FEB18
SHEET SIZE	D
SHEET NO.	1 OF 1

View File Created 10-MAY-2018 08:24:44