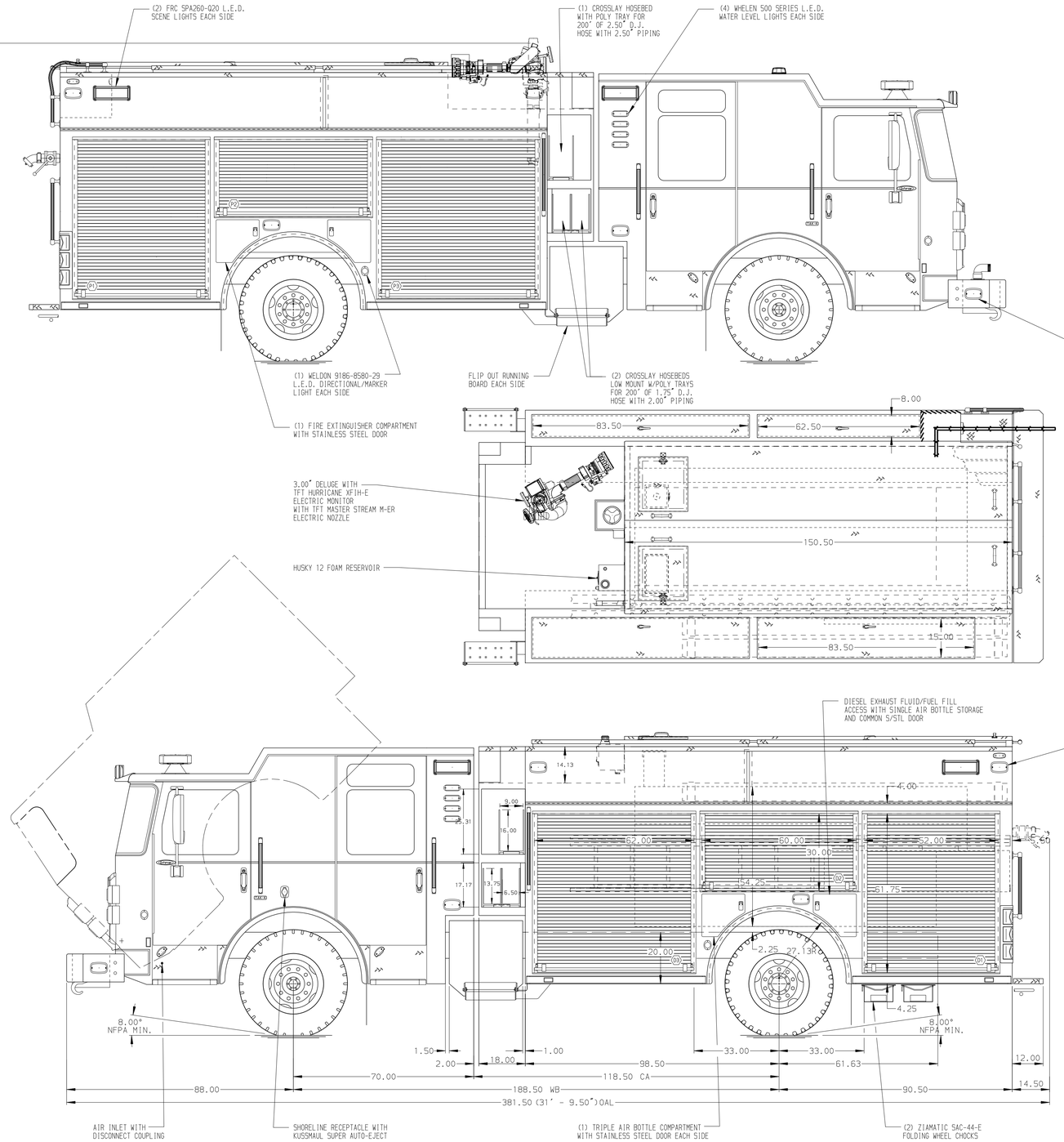

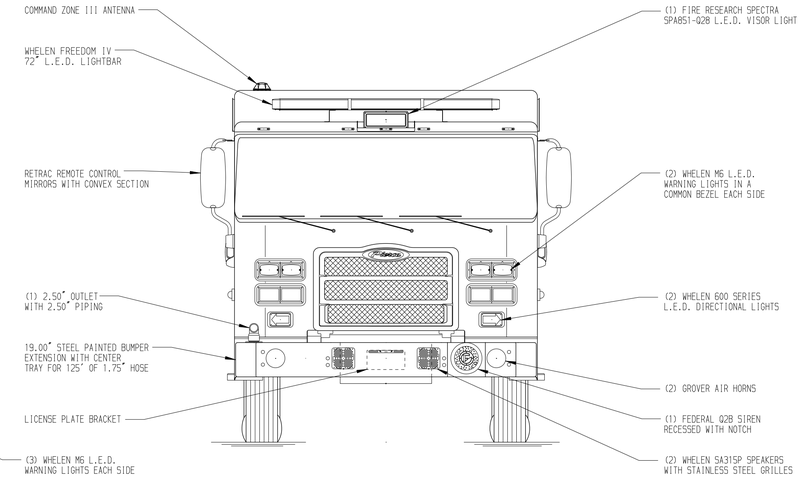

HOSEBED CAPACITIES

1 - 200' OF 2.50" HOSE
2 - 1000' OF 5.00" HOSE
3 - 600' OF 3.00" HOSE

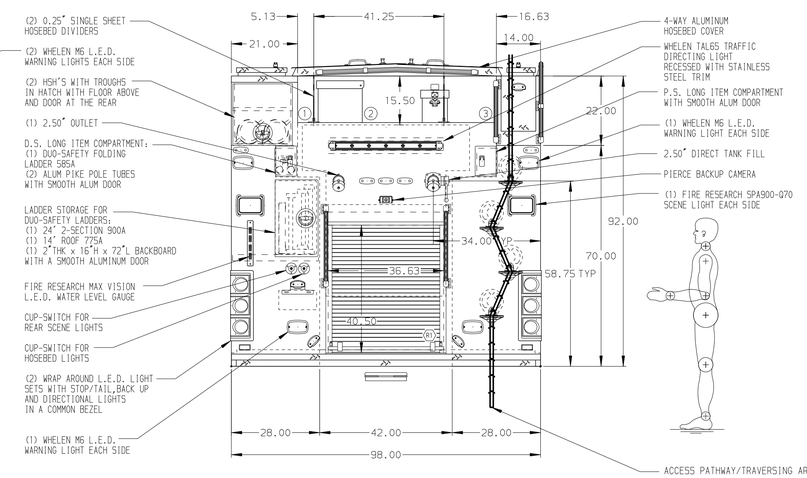

ALUMINUM BODY

SIDE ROLL AND FRONTAL IMPACT PROTECTION

NOTE

DIMENSIONS SHOWN ARE APPROXIMATE AND ARE SUBJECT TO MINOR DEVIATIONS AS MAY OCCUR OR BE NECESSARY IN CONSTRUCTION.
MINOR DETAILS NOT SHOWN.

1. BATTERY CHARGER LOCATED IN COMPARTMENT D3
2. BATTERY CHARGE INDICATOR LOCATED ON DRIVER'S SEAT RISER
3. DUAL L.E.D. LIGHT STRIPS LOCATED IN HOSE BED
4. ONE ADJUSTABLE FULL WIDTH/DEPTH SHELF IN COMPARTMENT D3, R1, TWO IN D1
5. ONE ADJUSTABLE TILTING SLIDE-OUT TRAY IN COMPARTMENT P3, P4, TWO IN P1
6. ONE FLOOR MOUNTED SLIDE-OUT TRAY IN COMPARTMENT D1, P1, P3 & R1
7. ONE SWING-OUT ALUMINUM TOOL BOARD IN COMPARTMENT D2
8. ONE VERTICAL PARTITION IN COMPARTMENT P3
9. ALUMINUM PEGBOARD WITH TRACKS ON THE REAR WALL OF COMPARTMENT D1, D2 & D3
10. ALL FOLDING STEPS TO BE TRIDENT WITH INTEGRATED L.E.D. LIGHT UNLESS SPECIFIED

REV	DATE	BY	CH
▽	-	-	-

CUSTOMER APPROVAL
APPROVED BY:
DATE:

Pierce MANUFACTURING INC.

CHASSIS DATA	TITLE	1500-D-1000P W/40G FOAM CELL, 189" PUC RESCUE BODY (3)XLAYS, DELUGE, HUSKY 12,(2) HARD SUCTION HOSES	
MAKE PIERCE	FOR	SOUTH HAYS FIRE DEPARTMENT SAN MARCOS, TEXAS	
MODEL ENFORCER	DWG NO.	32395AD	

JOB NO.	32395
SCALE 1:24	DATE
DRAWN BY AMI	24APR18
CHECKED BY AZA	24APR18
SHEET SIZE D	SHEET NO. 1 OF 1

View File Created 24-APR-2018 10:55:28