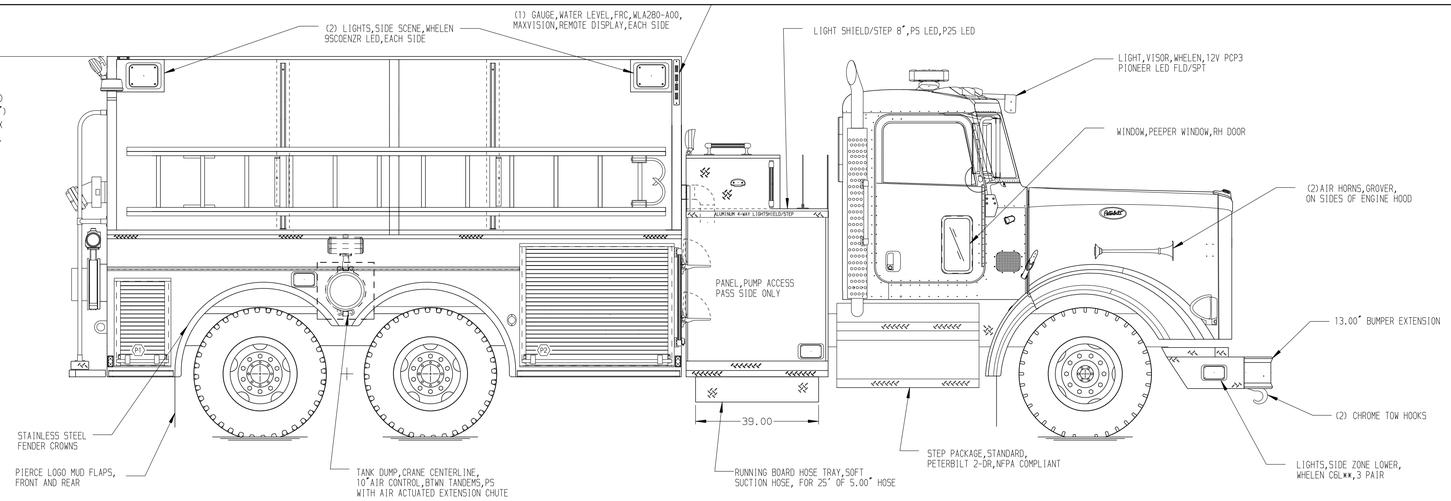

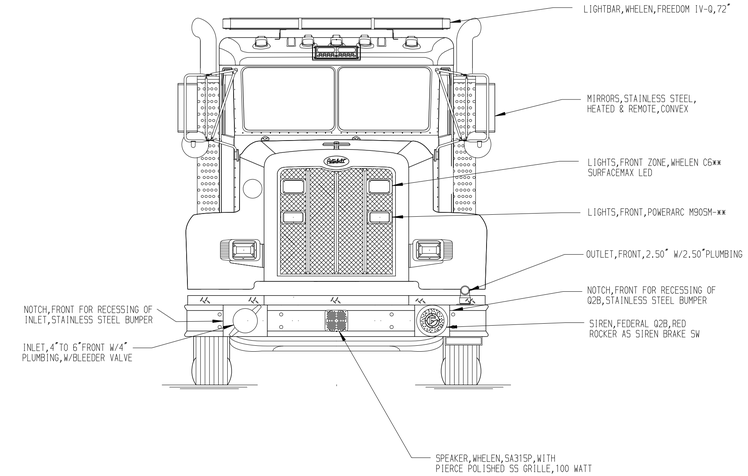

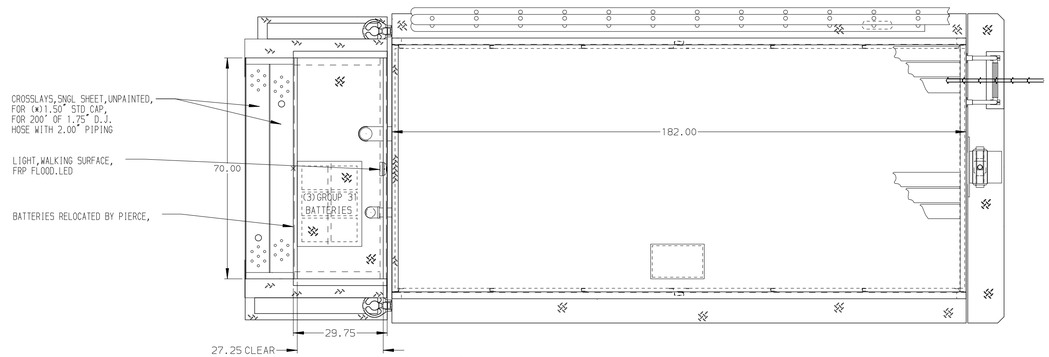

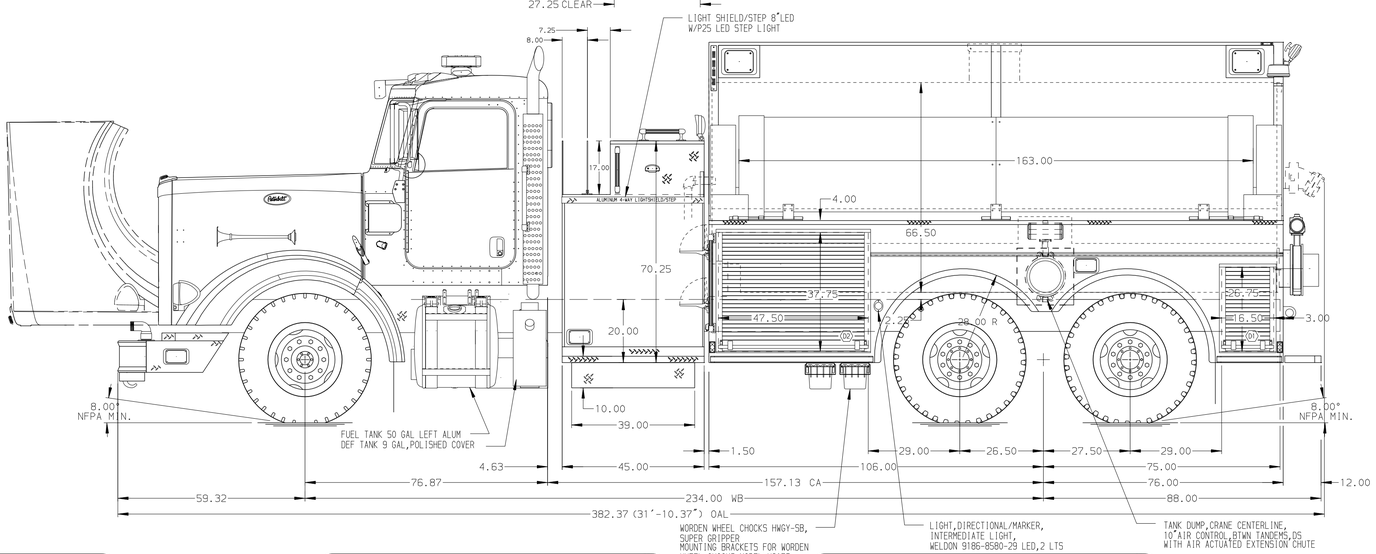

HOSEBED CAPACITIES

① 200' OF 2.50" HOSE

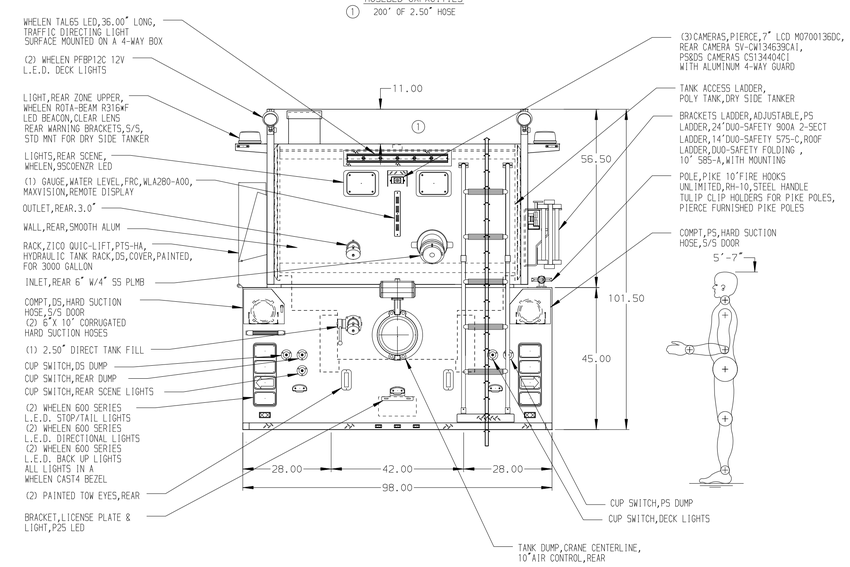

ALUMINUM BODY

MAXIMUM O.A.L. 384"

MAXIMUM O.A.H. 132"

NOTE

DIMENSIONS SHOWN ARE APPROXIMATE AND ARE SUBJECT TO MINOR DEVIATIONS AS MAY OCCUR OR BE NECESSARY IN CONSTRUCTION.
MINOR DETAILS NOT SHOWN.

REV	DATE	BY	CH
▽	09APR18	RWI	JAF

CHASSIS DATA: MAKE PETER; MODEL 367

TITLE: 1500-D-3000P,182" DRYSIDE W/HSH COMPTS & SIDE DUMPS 45"SIDE CONTROL,(2)1.5"CROSSLAYS

FOR: DENNIS TWP.FIRE DIST.#1 SOUTH SEAVILLE, NEW JERSEY

DWG NO. 32403AD

Pierce MANUFACTURING INC.

JOB NO.	32403
SCALE 1:24	DATE
DRAWN BY JLA	02APR18
CHECKED BY RWI	05APR18
SHEET SIZE D	SHEET NO. 1 OF 1

View File Created 09-APR-2018 12:58:26