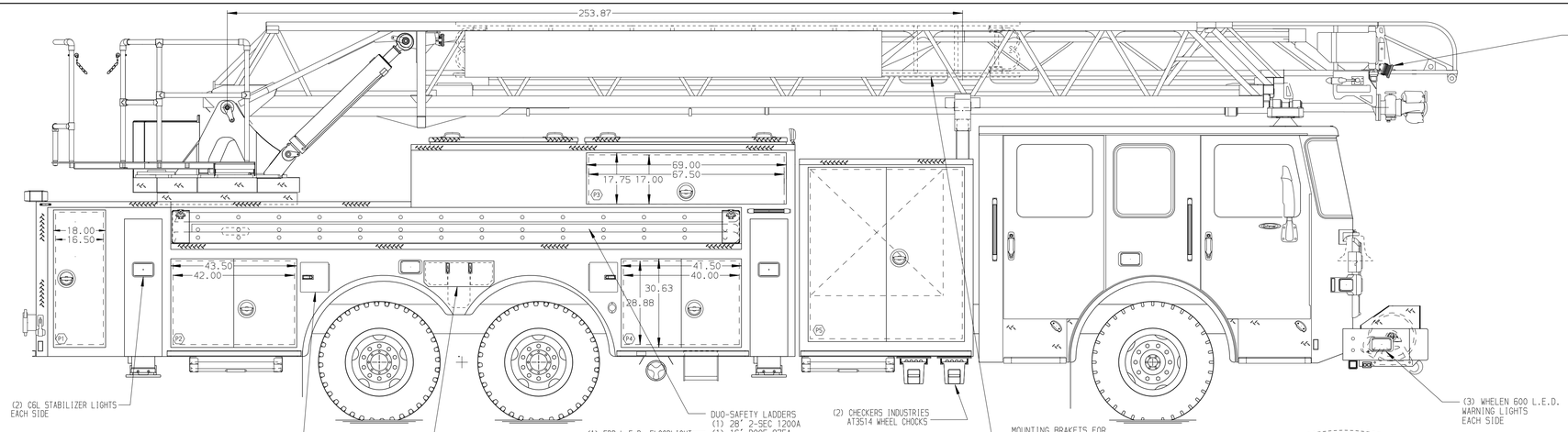

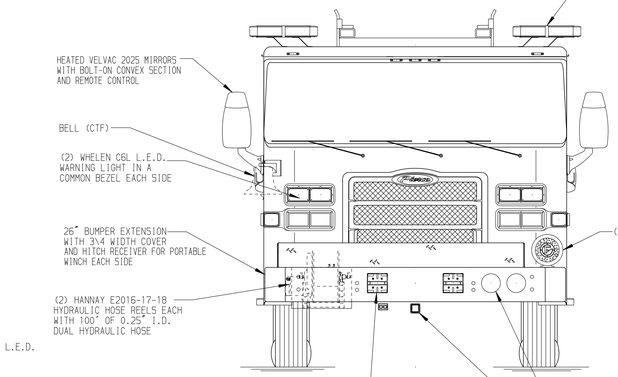

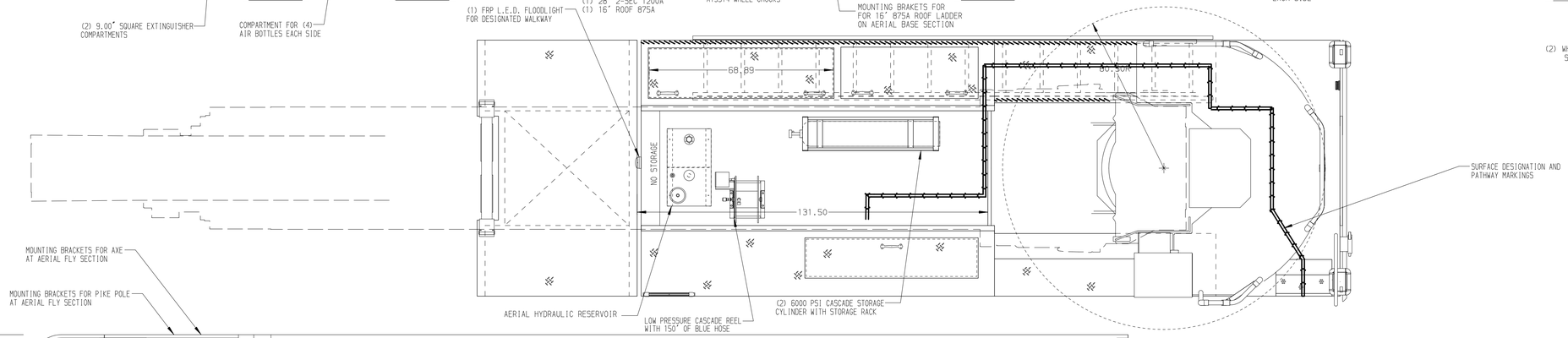

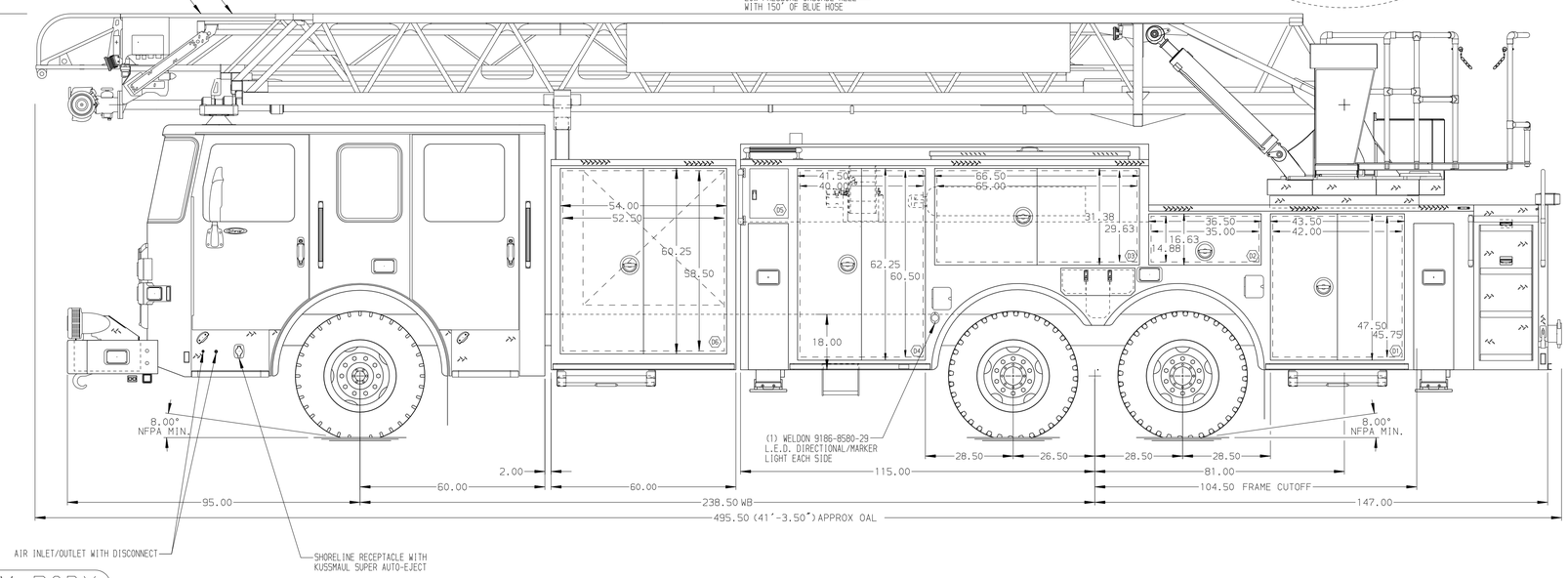

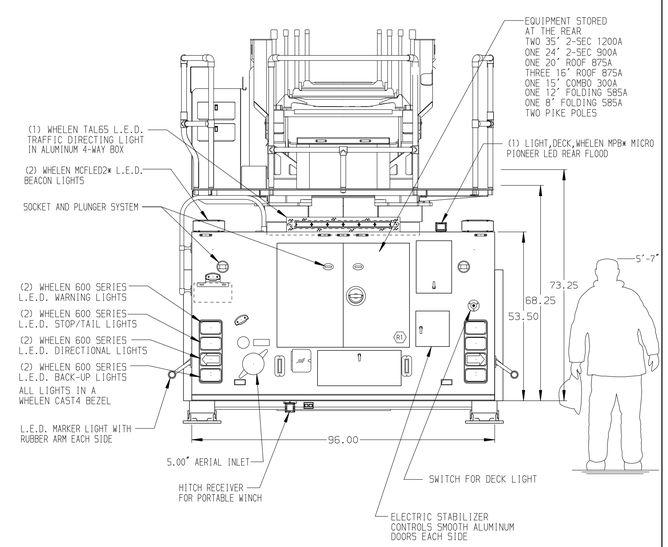

ALUMINUM BODY

NOTE

DIMENSIONS SHOWN ARE APPROXIMATE AND ARE SUBJECT TO MINOR DEVIATIONS AS MAY OCCUR OR BE NECESSARY IN CONSTRUCTION.
MINOR DETAILS NOT SHOWN.

1. RUBBER FENDER CROWNS
2. BATTERY CHARGER LOCATED IN COMPARTMENT D4
3. BATTERY CHARGE INDICATOR LOCATED ON DRIVER'S SEAT RISER
4. STABILIZER COMPARTMENTS MODIFIED FOR 18" GROUND PENETRATION
5. ONE ADJUSTABLE FULL WIDTH/FULL DEPTH SHELF IN COMPARTMENTS TBD
6. ONE ADJUSTABLE 1-WAY SLIDE-OUT TRAY 3/4 TRANSVERSE WITH 3" SIDES IN COMPARTMENTS TBD
7. ONE ADJUSTABLE TILTING SLIDE-OUT TRAY IN COMPARTMENTS TBD
8. ONE FLOOR MOUNTED SLIDE-OUT TRAY IN COMPARTMENT P2
9. SLIDE-OUT TOOL BOARD WITH PEGBOARD PATTERN IN COMPARTMENTS TBD
10. ONE VERTICAL PARTITION IN COMPARTMENT TBD
11. FULL HEIGHT VERTICAL PARTITION IN TRANSVERSE COMPARTMENTS TBD
12. ONE FLOOR EXTENSION WITH 1.00" DOWNTURNED LIP IN COMPARTMENT D6 & P5
13. STORAGE RACK FOR (8) AIR BOTTLES LOCATED TBD
14. LIFTING EYE ROPE RESCUE ATTACHMENT AT AERIAL TIP
15. CONTROL PANEL FOR LOW PRESSURE TOOL SYSTEM IN COMPARTMENT D4
16. TRIDENT FOLDING STEPS ON AERIAL DEVICE
17. 7.00" AERIAL LIMITED RETRACTION
18. 2-WAY INTERCOM SYSTEM BETWEEN AERIAL TIP AND TURNTABLE
19. AERIAL PEDESTAL RAISED 3.00"
20. AIR BAG RACK ON PASSENGER SIDE OF TRANSVERSE COMPARTMENT
21. 1500 GPM HIGH FLOW WATERWAY
22. STRUT STORAGE IN TRANSVERSE COMPARTMENT

REV	DATE	BY	CH
V	29MAR18	SVA	GRM

CHASSIS DATA
MAKE: PIERCE
MODEL: ENFORCER

Pierce MANUFACTURING INC.

TITLE: 107' ASCENDANT AERIAL LADDER & BODY ASSEMBLY
NO PUMP, NO TANK
FOR: TOWN OF SELMA
SELMA, NC
DWG NO.: 32410AD

JOB NO.	32410
SCALE	1:24
DATE	
DRAWN BY	SVA
	14MAR18
CHECKED BY	CRI
	23MAR18
SHEET SIZE	D
SHEET NO.	1 OF 1

View File Created 30-MAR-2018 09:19:25