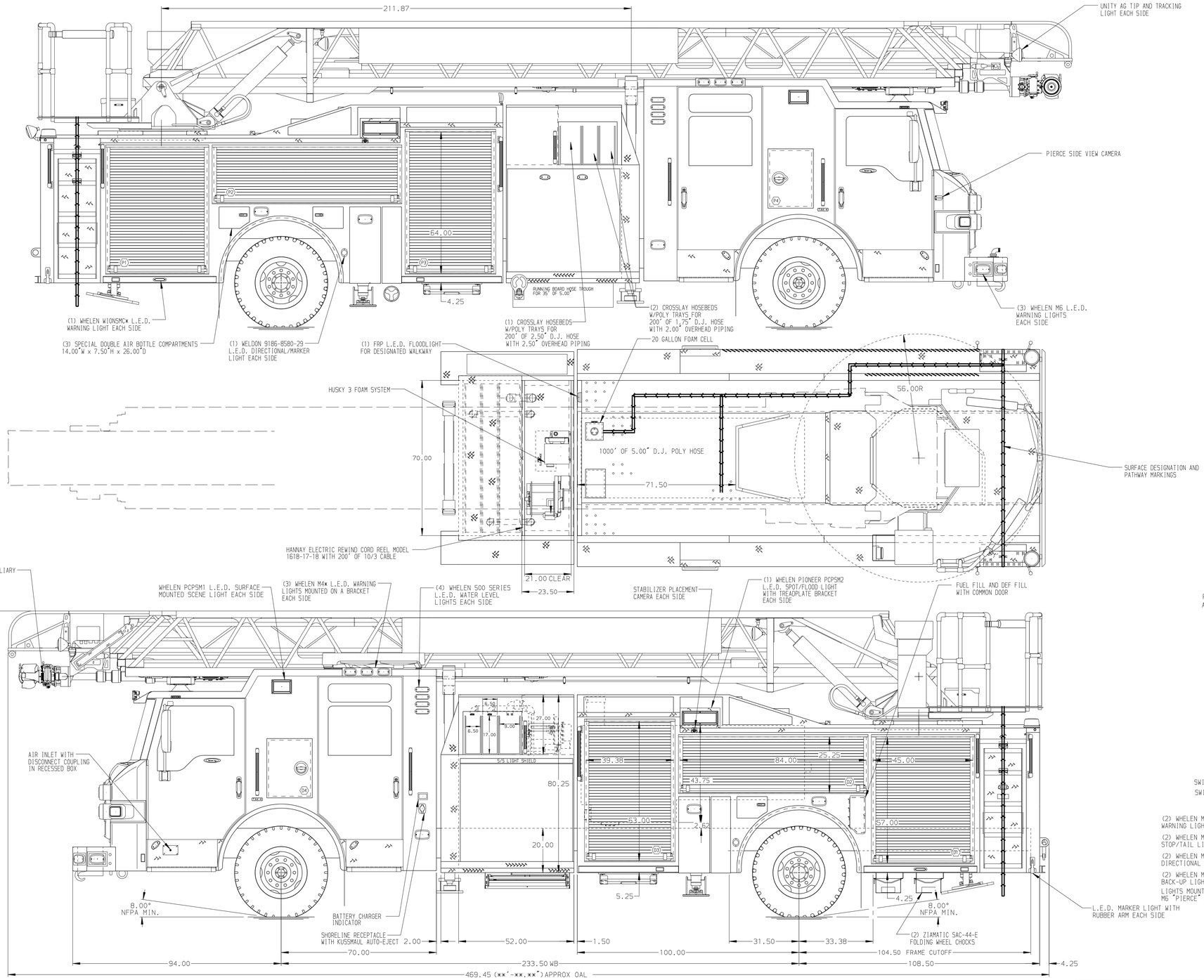

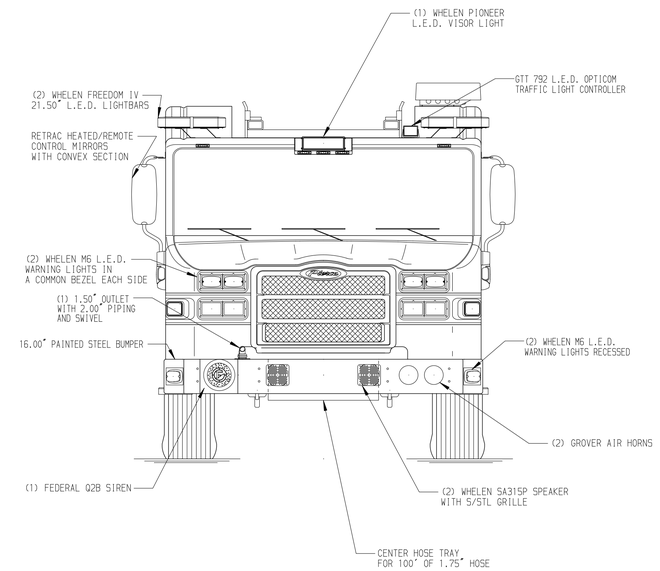

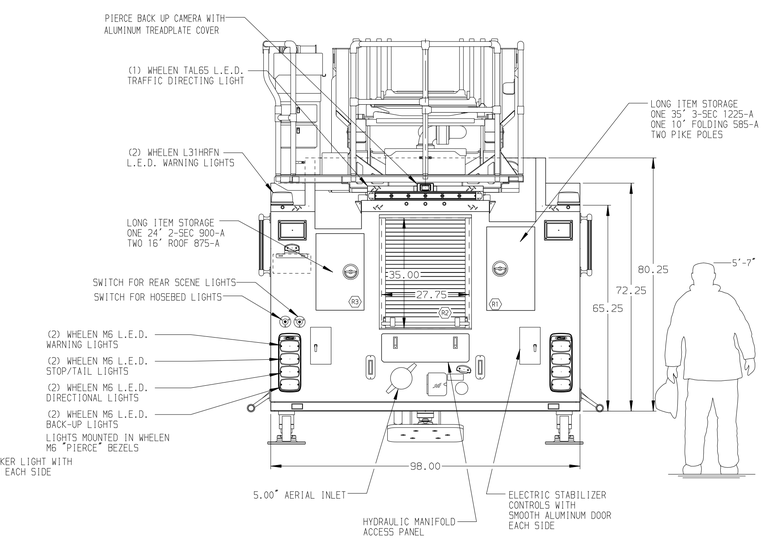

ALUMINUM BODY

SIDE ROLL AND FRONTAL IMPACT PROTECTION

NOTE

DIMENSIONS SHOWN ARE APPROXIMATE AND ARE SUBJECT TO MINOR DEVIATIONS AS MAY OCCUR OR BE NECESSARY IN CONSTRUCTION.
MINOR DETAILS NOT SHOWN.

1. ONE 1.50 OUTLET WITH 2.00 PIPING AND SWIVEL LOCATED IN CENTER BUMPER TRAY
2. LIFTING EYE ROPE RESCUE ATTACHMENT AT AERIAL TIP
3. DUAL L.E.D. LIGHT STRIPS LOCATED IN HOSE BED
4. BATTERY CHARGER LOCATED IN COMPARTMENT D3
5. CTECH DRAWER ASSEMBLY IN COMPARTMENT D3
6. ONE ADJUSTABLE SHELF IN COMPARTMENTS D1,D2,D3-TWO IN P1 & P3
7. ONE FLOOR MOUNTED SLIDE-OUT TRAY IN COMPARTMENTS P1,D3,P3 & R2
8. NON-RAISED AERIAL PEDESTAL
9. 1500 GPM HIGH FLOW WATERWAY
10. CIRCUIT BREAKER PANEL IN COMPARTMENT D3
11. ALUMINUM PEGBOARD WITH TRACKS ON THE REAR WALL OF COMPARTMENT D3
12. TRIDENT FOLDING STEPS ON AERIAL DEVICE
13. L.E.D. LIGHTING ON AERIAL LADDER SECTIONS
14. 2-WAY INTERCOM SYSTEM BETWEEN AERIAL TIP AND TURNTABLE
15. ONE ADJUSTABLE TILTING SLIDE-OUT TRAY IN COMPARTMENT D1
16. ONE ADJUSTABLE SLIDE-OUT TRAY IN COMPARTMENTS D1 & R2
17. ONE SWING-OUT ALUMINUM TOOL BOARD IN COMPARTMENT P2
18. NO LIMITED RETRACTION
19. ONE 15A/120V RECEPTACLE IN PASSENGER'S SIDE EMS COMPARTMENT

CUSTOMER APPROVAL

APPROVED BY: _____

DATE: _____

REV	DATE	BY	CH
▽	09APR18	SVA	GRM

CHASSIS DATA

MAKE: PIERCE

MODEL: VELOCITY

Pierce MANUFACTURING INC.

TITLE: 107' ASCENDANT AERIAL LADDER AND BODY ASSEMBLY
500 GALLON WATERTANK-480 WATER/20FOAM

FOR: BEXAR BULVERDE VOLUNTEER FIRE DEPT.
SAN ANTONIO, TX

DWG NO.: 32477AD

JOB NO.	32477
SCALE	1:24
DATE	
DRAWN BY	SVA
DATE	21MAR18
CHECKED BY	CRI
DATE	28MAR18
SHEET SIZE	D
SHEET NO.	1 OF 1

View File Created 09-APR-2018 09:59:31