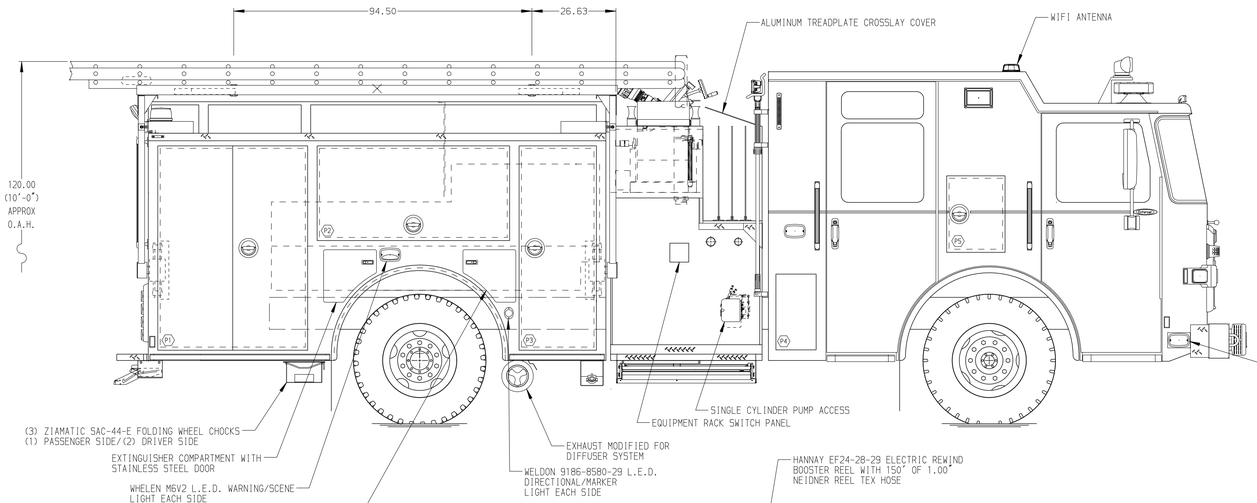

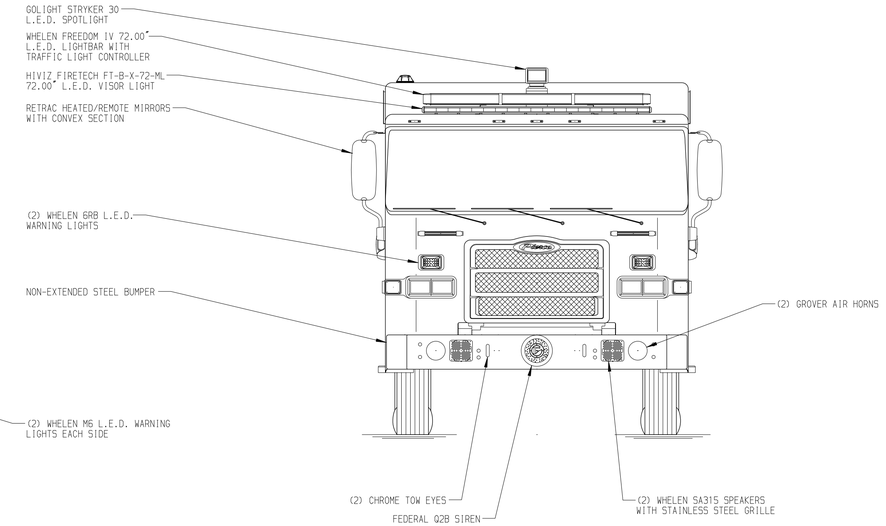

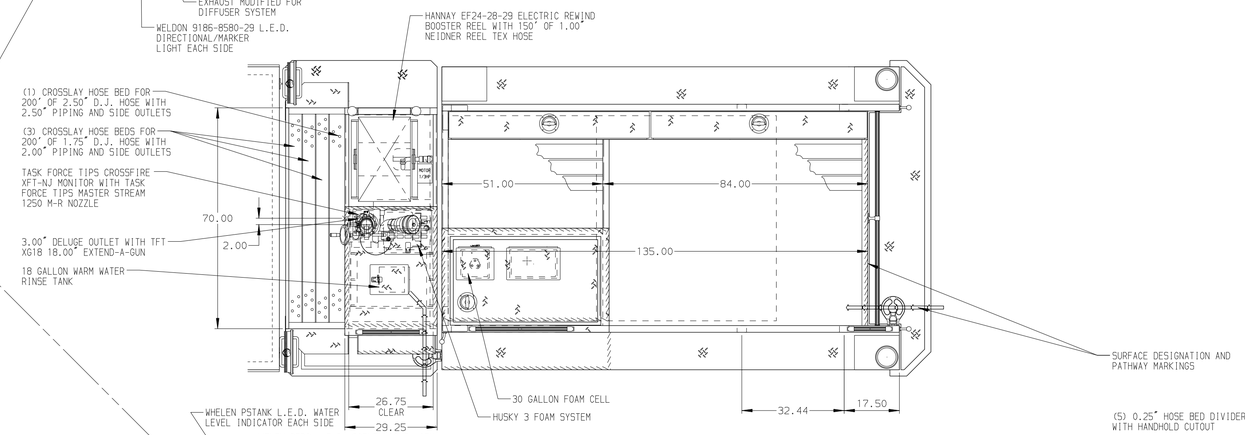

HOSEBED CAPACITIES

1. (2) 100' BUNDLES OF 2.50" D.J. POLY HOSE (1) BELOW SHELF/(1) ABOVE SHELF
2. (2) 100' BUNDLES OF 2.50" D.J. POLY HOSE (1) BELOW SHELF/(1) ABOVE SHELF
3. 150' OF 1.75" D.J. POLY HOSE
4. 150' OF 1.75" D.J. POLY HOSE
5. 400' OF 2.50" D.J. POLY HOSE
6. 1000' OF 5.00" D.J. POLY HOSE

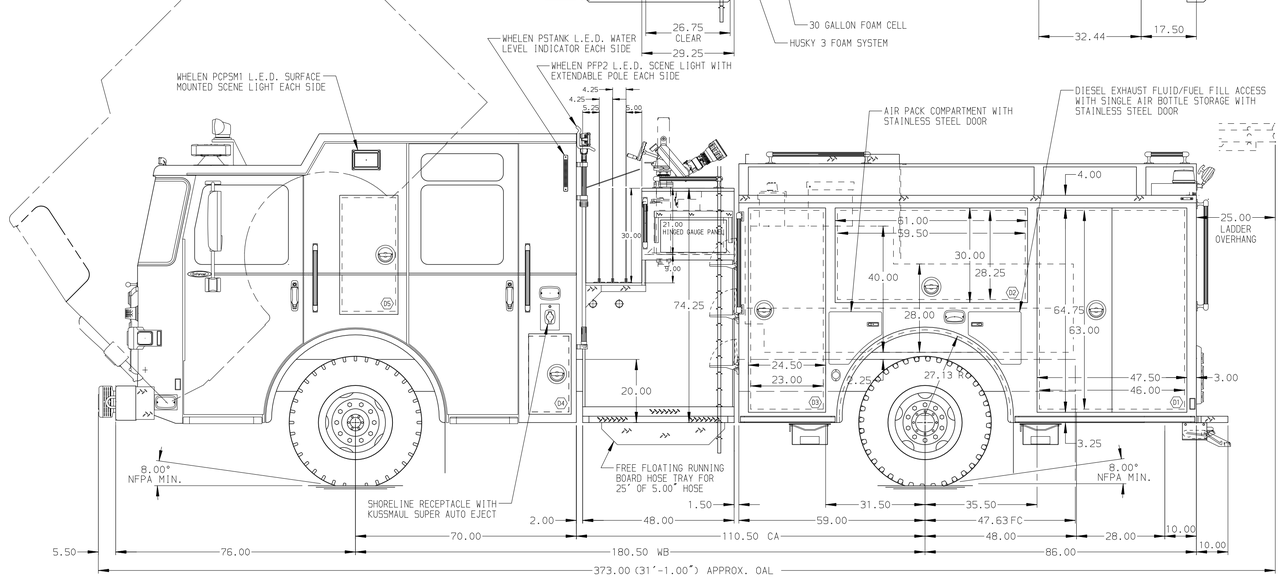

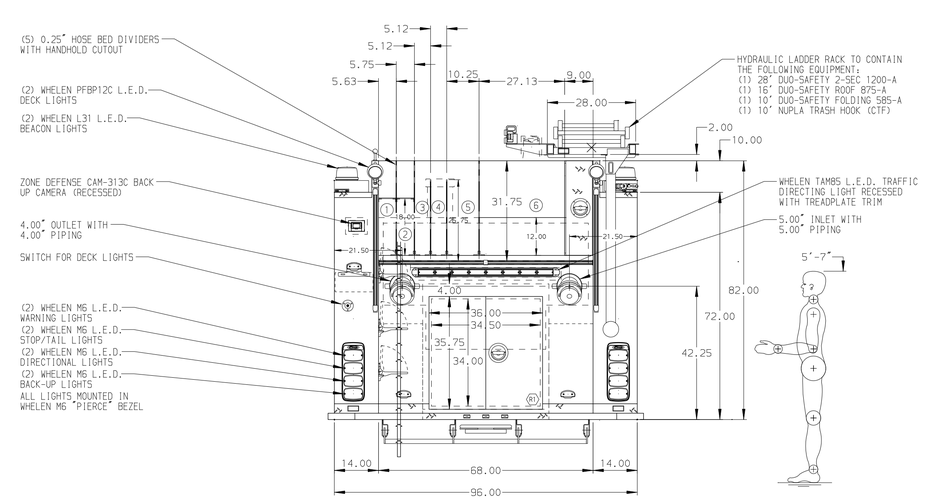

(ALUMINUM BODY) (MAXIMUM O.A.H. 120.00") (MAXIMUM O.A.L. 380.25") (SIDE ROLL AND FRONTAL IMPACT PROTECTION)

NOTE

DIMENSIONS SHOWN ARE APPROXIMATE AND ARE SUBJECT TO MINOR DEVIATIONS AS MAY OCCUR OR BE NECESSARY IN CONSTRUCTION.
MINOR DETAILS NOT SHOWN.

1. AIR INLET WITH DISCONNECT FITTING LOCATED ON DRIVER SIDE SEAT RISER
2. AIR OUTLET WITH SHUT OFF VALVE LOCATED ON DRIVER SIDE PUMP PANEL
3. BATTERY CHARGER LOCATED IN CREW CAB SEAT RISER
4. BATTERY CHARGER INDICATOR LOCATED ON DRIVER SIDE SEAT RISER
5. AMOOR LUMABAR L.E.D. WALKING SURFACE LIGHTING LOCATED IN THE CARGO AREA
6. PULL STRAPS FOR DOORS IN COMPARTMENT-D2,P2
7. ONE FULL WIDTH/DEPTH ADJUSTABLE SHELF WITH SIDES IN COMPARTMENT-D2,D3,P3,R1; THREE IN D1,P1
8. ONE ALUMINUM SWING-OUT TOOLBOARD IN COMPARTMENT-P2
9. EXTERIOR GRADE PLYWOOD ON THE BACK WALL IN COMPARTMENT-D1,D3,P1,P2
10. ONE DUPLEX RECEPTACLE IN COMPARTMENT-D1,P1,P3

REV	DATE	BY	CH
1	31AUG18	KLE	MSA
2	02AUG18	BST	MSA
3	08JUN18	BST	WKL

CHASSIS DATA
MAKE: PIERCE
MODEL: ENFORCER

Pierce MANUFACTURING INC.

TITLE: 2000-D-600P W/30 GAL. FOAM CELL,DELUGE,BOOSTER REEL 145' PUMPER BODY,HYDRAULIC LADDER RACK,HUSKY 3
FOR: PUGET SOUND REGIONAL FIRE AUTHORITY KENT, WA
DWG NO.: 32529AD

JOB NO.	32529 01-02
SCALE	1:24
DATE	21MAY18
DRAWN BY	BST
CHECKED BY	AJA 24MAY18
SHEET SIZE	D
SHEET NO.	1 OF 1

View File Created 04-SEP-2018 09:20:42