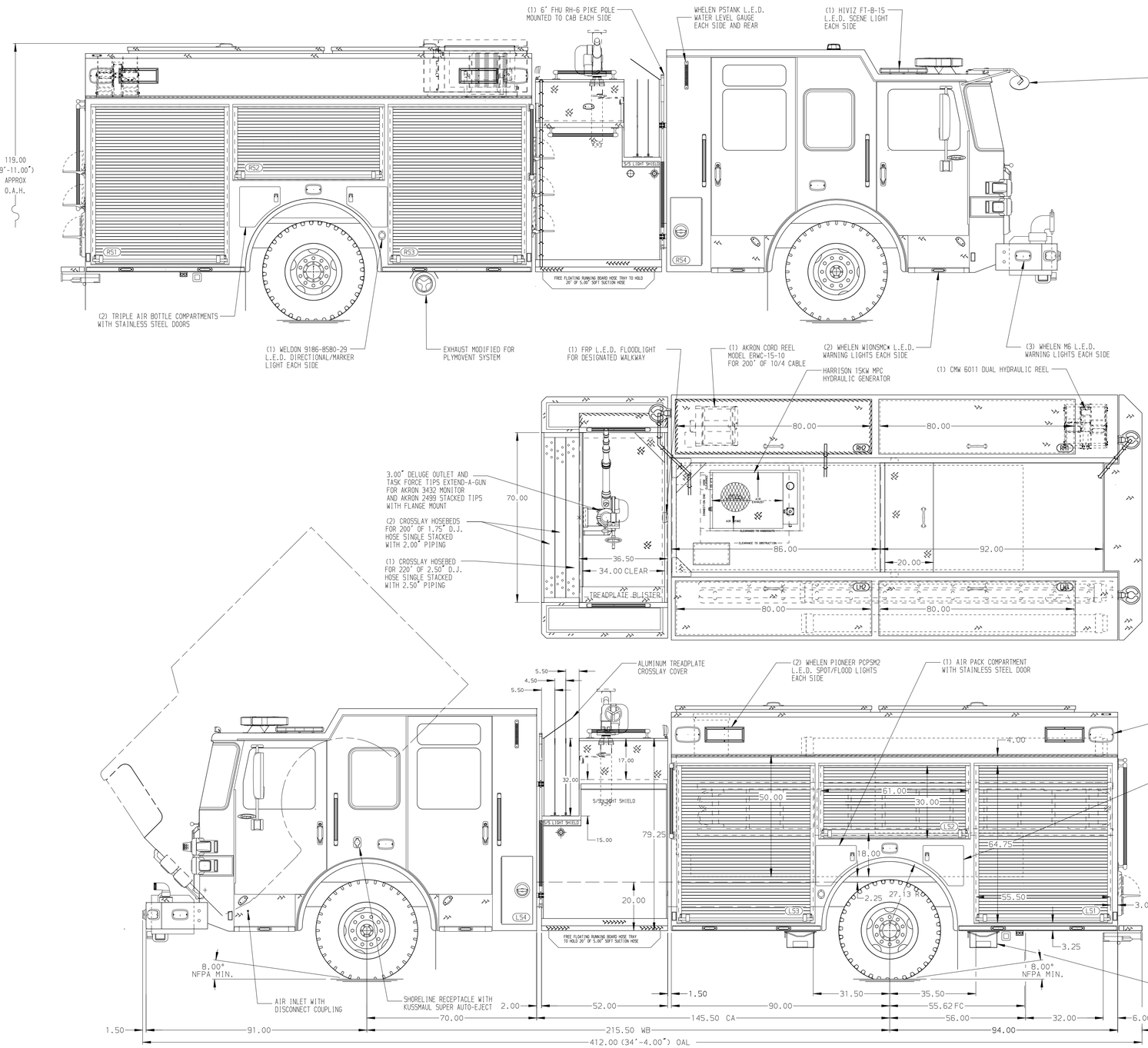

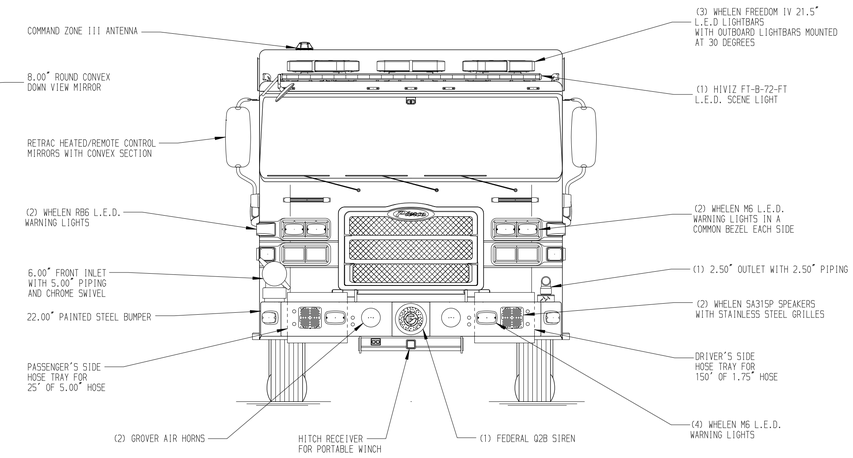

HOSEBED CAPACITIES

1 - 1200' OF 4.00" HOSE
2 - 600' OF 2.50" HOSE
3 - 400' OF 2.00" HOSE

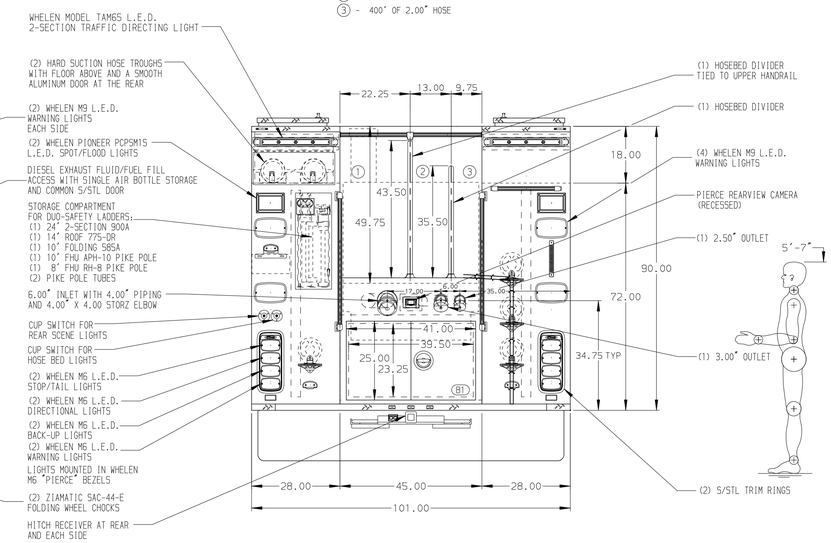

ALUMINUM BODY

NOTE

DIMENSIONS SHOWN ARE APPROXIMATE AND ARE SUBJECT TO MINOR DEVIATIONS AS MAY OCCUR OR BE NECESSARY IN CONSTRUCTION.
MINOR DETAILS NOT SHOWN.

1. MIC AND SPEAKER COMPARTMENT LOCATED ON DRIVER'S SIDE PUMP PANEL
2. THREE POLY TOOL BOXES SHIPPED LOOSE

REV	DATE	BY	CH
5	21FEB19	JWO	CSH
4	07NOV18	JWO	CSH
3	25OCT18	JWO	CSH
2	21SEP18	JWO	CSH
1	01JUN18	JWO	CDU

CHASSIS DATA — MAKE: PIERCE — MODEL: ENFORCER

Pierce MANUFACTURING INC.

TITLE: 1500-D-750 GAL POLY, 184" HDRP BODY
LADDERS THRU BODY, (3) X-LAYS, DELUGE, GENERATOR

FOR: KING GEORGE COUNTY
KING GEORGE, VIRGINIA

DWG NO. 32530AD-SH1

JOB NO.	32530
SCALE 1:24	DATE
DRAWN BY JWO	22MAY18
CHECKED BY CDU	24MAY18
SHEET SIZE D	SHEET NO. 1 OF 2

View File Created 21-FEB-2019 13:48:16